SHARP PARTS GUIDE

CODE:00ZARF152/P2E

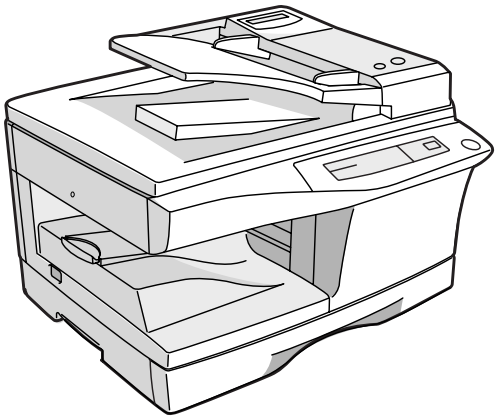

Digital Copier

MODEL AR-F152,AR-156 AR-151,AR-151E AR-121E

CONTENTS

1 Exteriors
2 Original cover unit (AR-121E/AR-151E/AR-151)
3 SPF exteriors(AR-156)
4 SPF pick up unit(AR-156)
5 SPF transport unit(AR-156)
6 Fax SPF Base tray unit(AR-F152)
7 Fax SPF panel & pick up unit(AR-F152)
8 Fax SPF transport unit(AR-F152)
9 Operation panel
10 Side door unit
11 Optical frame 1
12 Optical frame 2
13 LSU unit
14 Mirror holder unit
15 Deliyvery paper guide unit
16 Middle frame
17 Base plate unit 1
18 Base plate unit 2
19 Fusing unit
20 Drive unit
21 Single Manual Paper Feeding cover unit (AR-121E/AR-151E)
22 Multi Manual paper feeding cover unit (AR-151/AR-156/AR-F152)
23 Single Manual Paper Feeding unit (AR-121E/AR-151E)
24 Multi Manual paper feeding unit (AR-151/AR-156/AR-F152)
25 Socket holder unit
26 TC case unit
27 250 Sheets tray
28 DV cartridge unit
29 Process unit
30 Harness
31 Packing material & accessories
32 Fax PWB(AR-F152)
33 Fax panel PWB(AR-F152)
34 Operation PWB
35 Memory PWB(6MB) [AR-151/AR-156/AR-F152/AR-151E]
36 POD sensor PWB
37 PPD1 sensor PWB
38 PPD2 sensor PWB
39 MCU PWB(AR-151/AR-156/AR-F152)
40 MCU PWB(AR-151E/AR121E)
■ Index

SHARP CORPORATION

This document has been published to be used for after sales service only.
The contents are subject to change without notice.

DEFINITION

The definition of each Rank is as follows and also noted in the list

A : Parts necessary to be stocked as High usage parts.

B : Parts necessary to be stocked as Standard usage parts.

C : Low usage parts.

D : Parts necessary for refurbish.

E : Unit parts recommended to be stocked for efficient after sales service.
Please note that the lead time for the said parts may be longer than normal parts.

S : Consumable parts.

Please note that the following parts used in Copier under the same description are classified into A or B Rank depending upon the place used.

Example: Gear made of Metal, Sprocket, Bearing, Belt made of Rubber, Spring clutch mechanism.

A Rank : The parts which may be with the revolution or loading.

B Rank : Parts similar to A Rank parts, but are not included in Rank A.

Because parts marked with "⚠" is indispensable for the machine safety maintenance and operation, it must be replaced with the parts specific to the product specification.

○ Other than this Parts Guide, please refer to documents Service Manual (including Circuit Diagram) of this model.
○ Please use the 13 digit code described in the right hand corner of front cover of the document, when you place an order.
○ For U.S. only-Use order codes provided in advertising literature. Do not order from parts department.

✻ These parts are supplied by SMF.

1 Exteriors

NO.	PARTS CODE	PRICE RANK	NEW MARK	PART RANK	DESCRIPTION	
1	CCAB-0003QS16	AQ		D	Front cover	
2	LSŌU-0001QSZZ	AW		D	Delivery tray	
3	XEBSE30P08000	AA		C	Screw (3×8)	
4	LSŌU-0008QSZZ	AH		D	Extension tray	
5	XEBSE40P12000	AA		C	Screw (4×12)	
6	PCŌVP0035QSZZ	AL		C	Rear exterior cover	(AR-121E/AR-151E)
7	DHAi-0168QSZZ	AK		C	OP harness	(AR-156)
	DHAi-0040QSZZ	AK		C	OP harness	(Except AR-156)
8	TLABZ0058QSZZ	AD		C	Class 1 label	Except[Saudi Arabia]
9	XBBSE30P08000	AA		C	Screw (3×8)	
10	GCAB-0005QSZA	AN		D	Left exterior	(AR-121E/AR-151E)[Europe]
	GCAB-0005QSZZ	AN		D	Left exterior	Except(AR-121E/AR-151E)[Europe]
11	TLABH0282QSZZ	AF		C	Operation instruction label	
13	CFiX-0003QS02	AN		D	Glass fixing plate	
14	PSHEZ0026QSZZ	AE		C	Shading sheet	
15	PSHEZ0027QSZZ	AC		C	Table glass fixing sheet	
16	PGLSP0001QSZZ	AX		B	Table glass	
17	GCAB-0010QSZ1	AL		D	Right exterior SPF	(AR-151/AR-156/ARF152)
	GCAB-0006QSZA	AN		D	Right exterior	(AR-121E/AR-151E)[Europe]
	GCAB-0006QSZZ	AN		D	Right exterior	(AR-121E/AR-151E)Except[Europe]
18	GCAB-0028QSZZ	AY		D	Rear exterior	(AR-151/AR-156/ARF152)
	GCAB-0021QSZZ	AY		D	Rear exterior	(AR-121E/AR-151E)
19	TCAUA0770FCZZ	AB		D	Service caution label	
22	PMLT-0024QSZZ	AC		C	Fan cushion	
23	PFiLZ0002QSZZ	AL		D	Ozone filter	
25	PSHEZ0079QSZZ	AD		C	Table glass sheet	
26	PFTA-0006QSZZ	AG		D	Rear exterior cover PCL	(AR-151/AR-156/ARF152)
27	XEBSD30P08000	AA		C	Screw (3×8)	(AR-151/AR-156/ARF152)
28	PCŌVP0047QSZZ	AH		D	Rear exterior cover Fax A	(AR-151/AR-156/ARF152)
29	XBBSE30P08000	AA		C	Screw (3×8)	(AR-151/AR-156/ARF152)
30	PCŌVP0048QSZZ	AF		D	Rear exterior cover Fax B	(AR-151/AR-156/ARF152)
31	PSHEZ0093QSZZ	AC		C	Slit glass sheet R	(AR-151/AR-156/ARF152)
32	PSHEZ0094QSZZ	AC		C	Slit glass sheet F	(AR-151/AR-156/ARF152)
33	PSHEZ0095QSZZ	AD		C	SPF shading sheet	(AR-151/AR-156/ARF152)
34	PTPE-0010QSZZ	AC		C	Slit glass tape	(AR-151/AR-156/ARF152)
35	PSHEZ0141QSZZ	AC		C	Core holding mylar	
37	PGLSP0002QSZZ	AU		B	SPF slit glass	(AR-151/AR-156/AR-F152)
38	PSHEZ0181QSZZ	AC		C	Mylar sheet	(AR-151)
40	TLABZ4047FCZZ	AC		C	Enagy star label	(AR-F152)
41	TLABZ0105QSZZ	AD		C	LAG4 original label	(LAG4)
501	CFiX-0003QS59	AZ		E	Table unit	(AR-151/AR-156)Except[Europe,LAG4]
	CFiX-0003QS60	AZ		E	Table unit	(AR-151/AR-156/AR-F152)[Europe,LAG4]
	CFiX-0003QS52	BA		E	Table unit	(AR-121E/AR-151E)Except[Europe]
	CFiX-0003QS54	BA		E	Table unit	(AR-121E/AR-151E)[Europe]

1 Exteriors

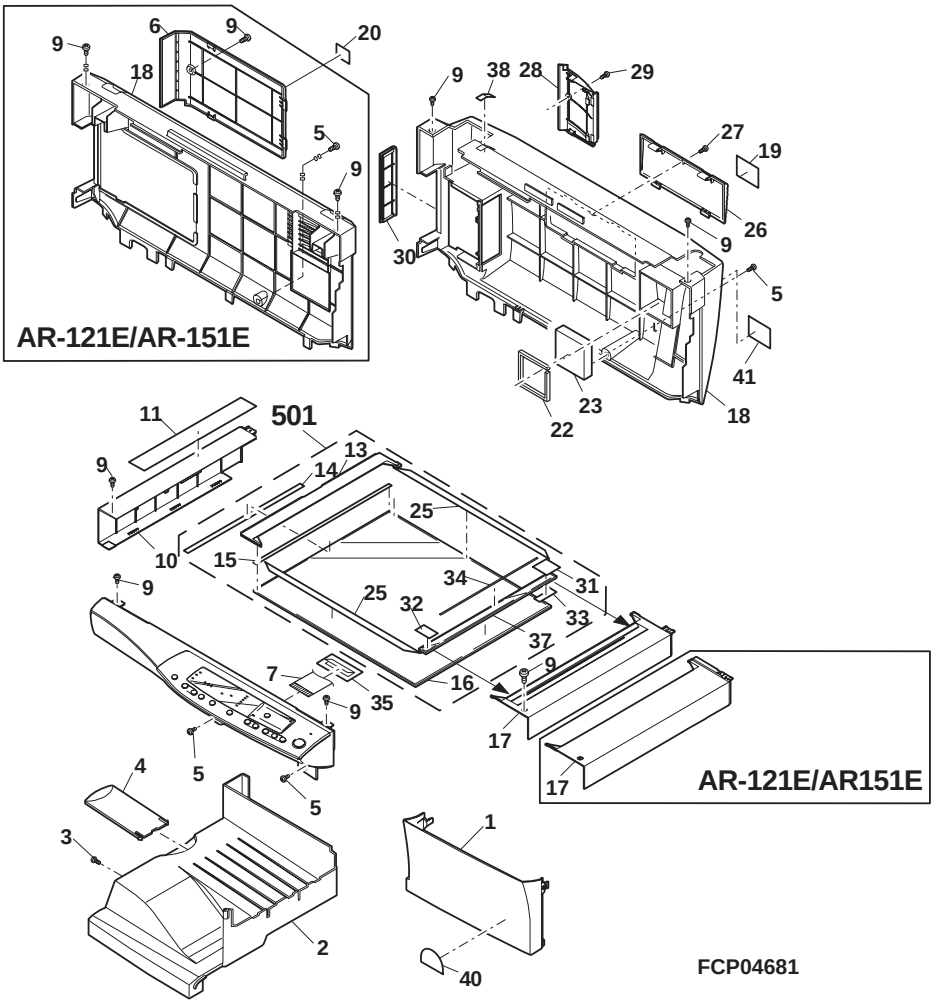

2 Original cover unit(AR-121E/AR-151E/AR-151)

NO.	PARTS CODE	PRICE RANK	NEW MARK	PART RANK	DESCRIPTION
1	G C Ō V H 0 0 0 3 Q S Z Z	AM		D	OC cover S
2	G C Ō V H 0 0 0 4 Q S Z Z	AX		D	OC cover M
3	P S H E Z 0 0 3 4 Q S Z 1	AV		D	OC mat
	(Unit)				
901	C C Ō V H 0 0 0 4 Q S 5 1	BC		E	OC cover unit

2 Original cover unit(AR-121E/AR-151E/AR-151)

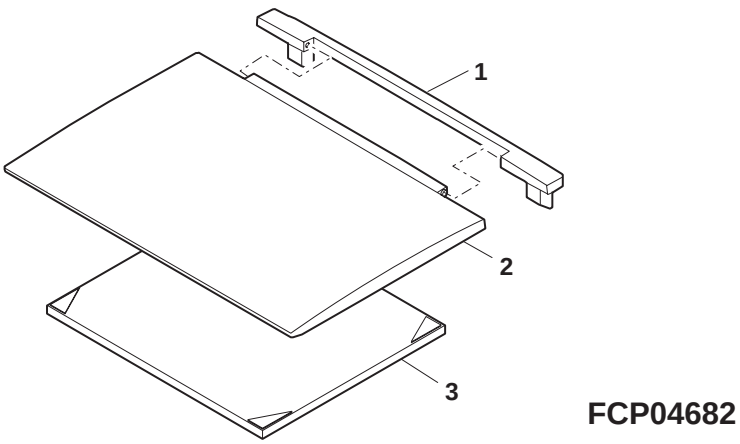

3 SPF exteriors(AR-156)

NO.	PARTS CODE	PRICE RANK	NEW MARK	PART RANK	DESCRIPTION
1	LSŌU−0004QSZZ	AX		D	Original tray
2	LPLTP0011QSZZ	AH		C	Control plate F
3	LPLTP0012QSZZ	AH		C	Control plate R
4	NGERR0377FCZZ	AD		C	Manual feeding rack gear
5	XEPSD30P08X00	AA		C	Screw (3×8X)
6	NGERH0193FCZZ	AB		C	Manual feeding gear
7	MSPRP0059QSZZ	AD		C	Control plate spring
8	PCŌVP0036QSZZ	AK		D	Rack cover
9	LSŌU−0006QSZZ	AL		D	Middle tray
10	PCŌVP0022QSZZ	AR		C	Upper cover
11	CFRM−0011QS55	BH		E	SPF pick up unit
12	LBNDJ0013FCZ1	AA		C	Wire band
13	XEBSE40P12000	AA		C	Screw (4×12)
14	XEBSE40P14000	AA		C	Screw (4×14)
15	XHBSE30P10000	AA		C	Screw (3×10)
16	XBPSD30P06KS0	AA		C	Screw (3×6KS)
17	RPLU−0005QSZZ	AQ		B	Gate solenoid
18	MLEVP0036QSZZ	AD		C	Delivery gate lever
19	MSPRD0126QSZZ	AC		C	Delivery gate spring
20	PSPŌ−0004QSZZ	AB		C	Delivery gate sponge
21	PSHEP0038QSZZ	AE		C	Base tray sheet
22	XEBSE30P14000	AA		C	Screw (3×14)
23	PSHEZ0151QSZZ	AD		C	Motor sheet DSPF
24	XBPSD30P08KS0	AA		C	Screw (3×8KS)
25	MLEVF0041QSZZ	AD		C	Lever
26	NBRGM5006BCZZ	AB		C	Metal D (B-F6-7)
27	PRNGP0090FCZZ	AA		C	Ring (E5)
28	LPLTP0014QSZZ	AK		C	Delivery gate
29	PSHEZ0068QSZZ	AC		C	PS sheet
30	MHNG−0005QSZZ	AY		C	DSPF hinge L
31	PCUSS0016QSZZ	AB		C	Middle tray cushion
32	PSHEZ0119QSZZ	AE		C	OC mat sheet DF
33	LX−BZ0016QSZZ	AC		C	Screw (3×8)
34	PSPŌ−0003QSZZ	AC		C	Sponge
35	XRESP20−04000	AA		C	E-ring
36	NRŌLP0011QSZZ	AD		C	Delivery roller
37	PSPŌ−0001QSZZ	AB		C	Sponge
38	NSFTZ0013QSZZ	AF		C	Delivery shaft
39	LPLTP0041QSZZ	AE		C	Pressure plate
40	XBPSD30P10KS0	AB		C	Screw (3×10KS)
41	MSPRD0070QSZZ	AC		C	Delivery spring B
42	MSPRD0069QSZZ	AC		C	Delivery spring A
43	NSFTZ0014QSZZ	AP		C	shaft
44	PSHEZ0118QSZZ	AE		C	OC mat sheet DR
45	MHNG−0006QSZZ	AY		C	DSPF hinge R
46	NRŌLP0010QSZZ	AD		C	Transport roller
47	MSPRP0052QSZZ	AD		C	Delivery spring
48	MSPRD0154QSZZ	AD		C	Delivery earth spring
49	NSFTZ0009QSZZ	AE		C	Transport shaft
50	MSPRP0060QSZZ	AD		C	Transport spring
51	MSPRC0149QSZZ	AC		C	PS earth spring SPF
52	LPLTM0122QSZZ	AD		C	Support plate earth
53	LPLTM0096QSZZ	AF		C	Base tray reinforce plate
54	LSŌU−0007QSZZ	BC		D	Base tray R
55	XEBSD30P08000	AA		C	Screw (3×8)
56	PCUSS0010QSZ1	AV		D	OC mat

3 SPF exteriors(AR-156)

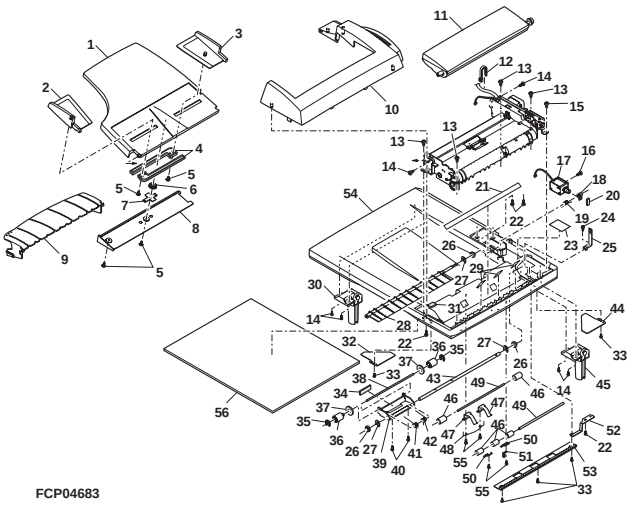

4 SPF pick up unit(AR-156)

NO.	PARTS CODE	PRICE RANK	NEW MARK	PART RANK	DESCRIPTION
1	GCAB−0008QSZZ	AM		D	Open and shut exterior
2	PSPÕ−0002QSZZ	AC		C	Stopper sponge
4	MARMP0003QSZ1	AD		C	Stopper arm
5	LSTPP0007QSZZ	AC		C	Paper stopper R
6	XEBSD30P08000	AA		C	Screw (3×8)
7	CPWBF0009QS51	AG		E	SPF sensor PWB
8	DHAi−0055QSZZ	AK		C	Sensor harness
9	MLEVP0009QSZZ	AD		C	Set detect lever ACT
10	MLEVP0010QSZZ	AE		C	Open and shut detect lever ACT
11	RPLU−0004QSZ1	AQ		B	PU solenoid
12	XBPSD30P06KS0	AA		C	Screw (3×6KS)
13	MARMP0002QSZZ	AD		C	Solenoid arm
14	MSPRT0067QSZ1	AB		C	Solenoid arm spring
15	XRESP40−06000	AA		C	E-ring
16	NGERH0073QSZZ	AE		C	Clutch gear (20T)
17	PPiPP0010QSZZ	AD		C	Clutch sleeve R
18	MSPRC1316FCZ1	AE		C	MF clutch spring B
19	LBÕSZ1508FCZZ	AG		C	Cam boss A2
20	LBSHZ0303FCZZ	AC		C	M Bushing C
21	NSFTZ0012QSZZ	AG		C	Clutch shaft
22	LBSHZ0006QSZZ	AC		C	M Bushing 2
23	NPLYZ0010QSZZ	AE		C	20MXL pulley
24	XRESP30−06000	AA		C	E-ring
25	MSPRT0066QSZ1	AC		C	Clutch pawl spring
26	PTME−0019QSZZ	AD		C	Clutch pawl
27	NRÕLP0024QSZZ	AL		C	Pick up roller
28	NGERH0990FCZZ	AB		C	Gear (16T)
29	XPSSP20−07000	AA		C	Spring pin (ϕ2-7)
30	NGERH0992FCZZ	AB		C	Gear (20T)
31	NRÕLR0922FCZZ	AR		C	Manual feeding roller
32	NSFTZ0011QSZZ	AG		C	PF shaft
33	MSPRC0115QSZZ	AB		C	Paper feeding spring
34	MARMP0004QSZZ	AF		C	Pick up arm
35	LFRM−0011QSZ1	AL		D	Paper feedind frame
36	MSPRD0114QSZ1	AD		C	PF frame spring
	(Unit)				
901	CFRM−0011QS55	BH		E	SPF pick up unit

4 SPF pick up unit(AR-156)

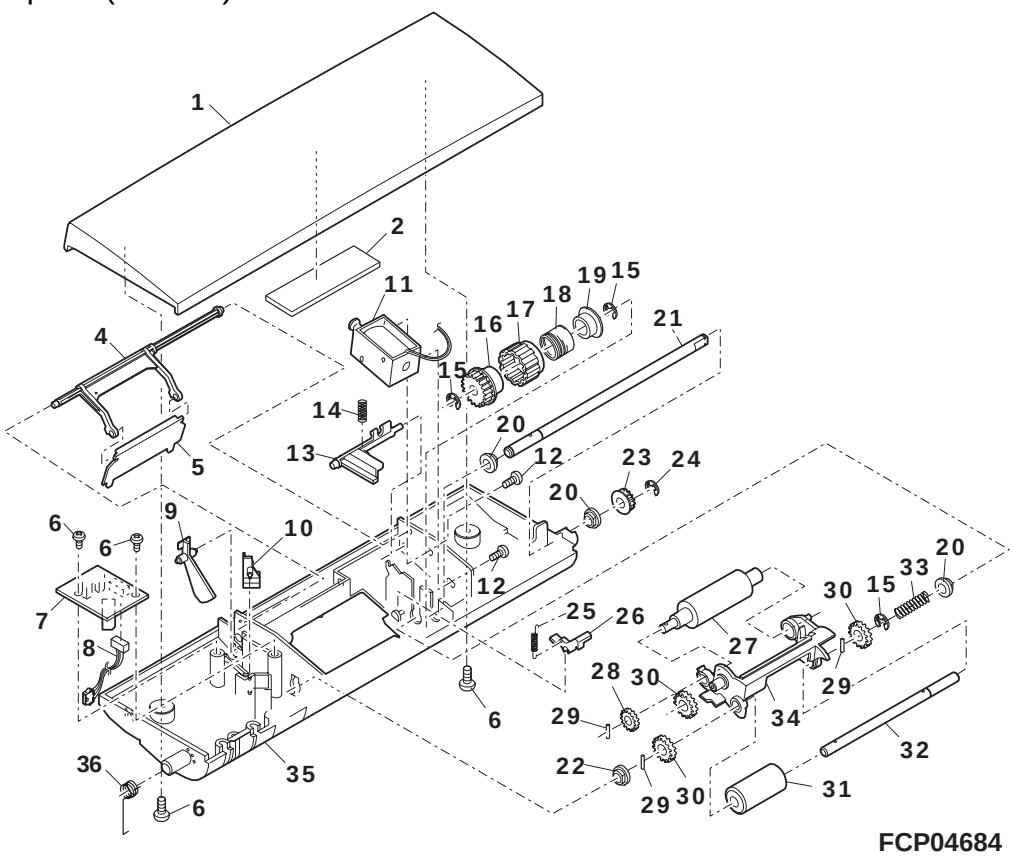

FCP04684

5 SPF transport unit(AR-156)

NO.	PARTS CODE	PRICE RANK	NEW MARK	PART RANK	DESCRIPTION
1	PSHEZ2174FCZZ	AB		C	Paper feeding sheet
2	PSHEZ0039QSZZ	AG		C	Sheet
3	LPLTP0013QSZZ	AD		C	Plate
4	MSPRC0062QSZZ	AC		C	Pressure spring
5	PGiDM0022QSZZ	AN		C	Paper feeding paper guide upper
6	NRŌLM0027QSZZ	AP		C	Delivery roller R
7	PBRSR0003QSZ1	AK		B	Discharge brush
8	PGiDH0028QSZZ	AK		C	Paper feeding paper guide lower
9	XEBSD30P08000	AA		C	Screw (3×8)
10	PGiDM0057QSZZ	AL		C	U-turn R paper guide
11	DHAi−0147QSZ2	AW		C	SPF interface harness R
12	XHBSE30P06000	AA		C	Screw (3×6)
13	RMŌTP0013QSZZ	BB		B	SPF motor
14	PSPŌ−0004QSZZ	AB		C	Delivery gate sponge
15	RPLU−0015QSZZ	AS		B	Solenoid
16	LBNDJ0013FCZ1	AA		C	Wire band
17	LFRM−0015QSZZ	AK		C	Drive frame R
18	XBBSD30P04000	AA		C	Screw (3×4)
19	XBPSD30P05K00	AA		C	Screw (3×5K)
20	XRESP50−06000	AA		C	E-ring
21	PSHEP3029FCZZ	AA		C	Flange sheet DUP2
22	NBLTT0011QSZZ	AG		B	Belt (85MXL4.8)
23	NGERH0047QSZZ	AF		C	Gear (48T/15T)
24	XPSSP20−09000	AA		C	Spring pin (ϕ2-9)
25	NBRGM0501FCZZ	AB		C	Metal D-N
26	NGERH0079QSZZ	AD		C	Gear (30T)
27	NBRGC0017QSZZ	AC		C	Bearing (F6-10)
28	PCLC−0002QSZZ	AV		B	Transport clutch
29	XRESP40−06000	AA		C	E-ring
30	LFRM−0014QSZZ	AE		C	Frame RD
31	MSPRP0065QSZZ	AD		C	Open and shut lock spring
32	XEBSD30P12000	AA		C	Screw (3×12)
33	NPLYZ0146FCZZ	AB		C	22MXL pulley (22MXL)
34	NBLTT0010QSZZ	AG		B	Belt (74MXL4.8)
35	JKNBZ0004QSZZ	AD		C	JAM release knob
36	MSPRC0063QSZZ	AB		C	Delivery paper guide spring
37	RDTCT0004QSZZ	AL		B	Inlet detect sensor
38	PGiDM0021QSZZ	AQ		C	Transport R paper guide
39	LPLTP0015QSZZ	AH		C	Turnover gate
40	NRŌLM0026QSZZ	AQ		C	Transport roller
41	PGiDH0027QSZZ	AK		C	Delivery R paper guide
42	PSHEZ0164QSZZ	AF		C	White sheet
43	NRŌLM0022QSZZ	AP		C	PS roller
44	PSHEZ0162QSZZ	AB		C	Harness protection sheet R
45	MSPRD0163QSZZ	AC		C	Earth spring

5 SPF transport unit(AR-156)

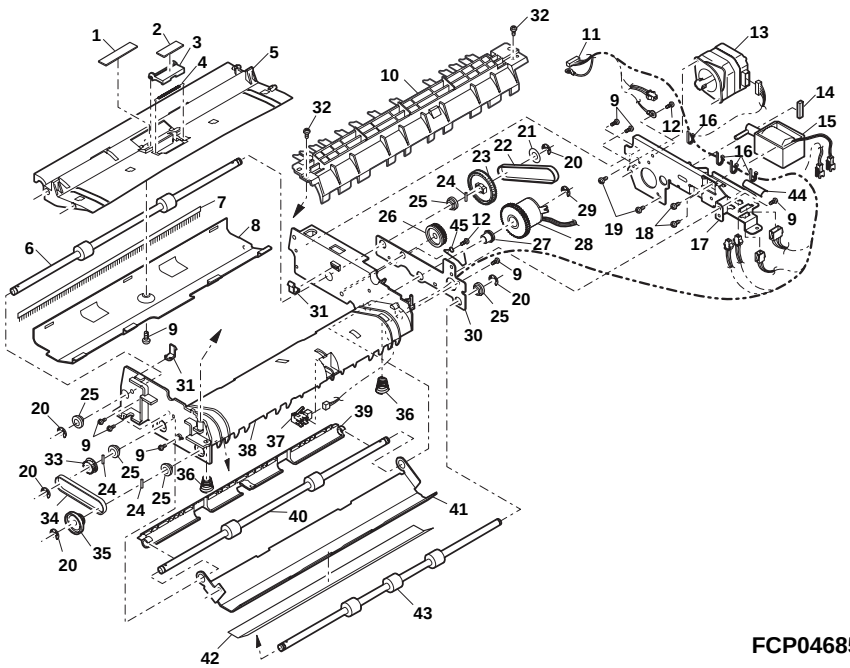

FCP04685

6 Fax SPF Base tray unit(AR-F152)

NO.	PARTS CODE	PRICE RANK	NEW MARK	PART RANK	DESCRIPTION
1	LANGT0005QSZZ	AD		C	Shaft holding angle R
2	XEBSD30P10000	AA		C	Screw (3×10)
3	XEBSD40P10000	AA		C	Screw (4×10)
6	LBNDJ0013FCZ1	AA		C	Wire band
8	LANGT0004QSZZ	AC		C	Shaft holding angle F
9	XEBSD30P12000	AA		C	Screw (3×12)
12	PSHEP0038QSZZ	AE		C	Base tray sheet
13	PSHEP0063QSZZ	AC		C	Transport sheet
14	PSHEZ0102QSZZ	AD		C	Motor pressure sheet
15	MSPRP0113QSZ1	AD		C	Earth spring
16	PSHEP0037QSZ1	AE		C	OC sheet
18	NRŌLP0011QSZZ	AD		C	Delivery roller
19	PSPŌ−0001QSZZ	AB		C	Sponge
20	NSFTZ0010QSZZ	AE		C	Delivery shaft
21	NSFTZ0009QSZZ	AE		C	Transport shaft
22	PSHEZ0112QSZZ	AE		C	Delivery earth sheet SPF
23	NRŌLP0010QSZZ	AD		C	Transport roller
24	MSPRT0061QSZZ	AC		C	Delivery spring
25	XEBSD30P08000	AA		C	Screw (3×8)
26	MSPRP0060QSZZ	AD		C	Transport spring
27	MSPRC0149QSZZ	AC		C	SPF earth spring
28	MHNG−0004QSZZ	AX		C	SPF hinge R
29	XEBSE40P14000	AA		C	Screw (4×14)
30	LPLTM0096QSZZ	AF		C	Base tray reinforce plate
31	LX−BZ0016QSZZ	AC		C	Screw
32	MHNG−0003QSZZ	AX		C	SPF hinge L
33	PCUSS0010QSZ1	AV		D	OC mat
34	LSŌU−0005QSZ3	BB		D	Base tray
35	PCŌVP0036QSZZ	AK		D	Rack cover
36	NGERH0193FCZZ	AB		C	UC manual feed gear
37	MSPRP0059QSZZ	AD		C	Control plate spring
38	XEPSD30P08X00	AA		C	Screw (3×8X)
41	NGERR0377FCZZ	AD		C	Manual feed gear
42	LPLTP0140QSZZ	AF		C	Control plate R
43	LSŌU−0020QSZZ	AT		D	Original tray
44	LPLTP0139QSZZ	AF		C	Control plate F

6 Fax SPF Base tray unit(AR-F152)

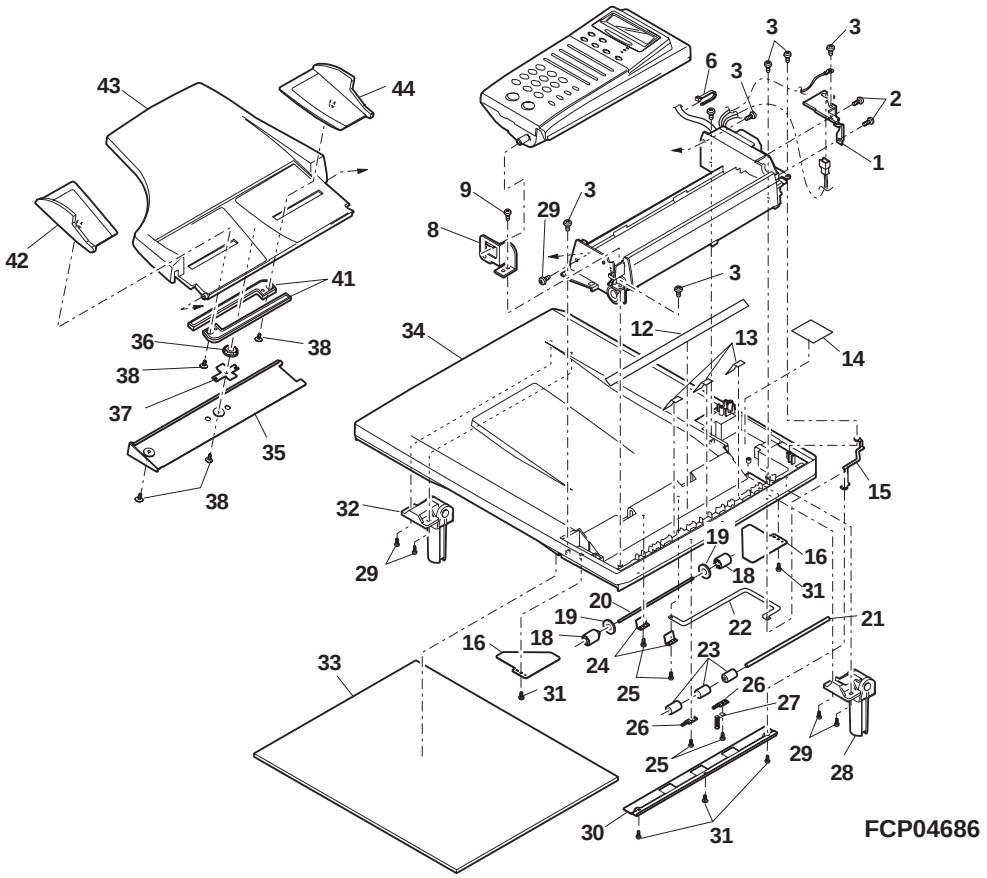

7 Fax SPF panel & pick up unit(AR-F152)

NO.	PARTS CODE	PRICE RANK	NEW MARK	PART RANK	DESCRIPTION
1	PFiLW0009QSZZ	AL		D	FAX filter E (U.Kingdom,Holland,Sweden)
	PFiLW0009QSZ2	AL		D	FAX filter F (France)
	PFiLW0009QSZ3	AL		D	FAX filter G (Germany,Switzrland)
	PFiLW0009QSZ5	AL		D	FAX filter I (Italy)
	PFiLW0009QSZ5	AL		D	FAX filter S (Spain)
2	CCAB-0027QS01	AS		D	Operation panel
3	JBTN-0039QSZZ	AE		C	Enter key
4	JBTN-0038QSZZ	AF		C	Function key
5	CBTN-0041QS01	AH		E	Stop key
6	CBTN-0040QS01	AH		E	Start key
7	JBTN-0036QSZZ	AF		C	One tach key
8	CBTN-0037QS01	AK		E	Tenkey
9	CPWBF0046QS51	BH		E	Fax panel PWB
10	XEBSD26P06000	AA		C	Screw (2.6×6)
11	PSPŌ-0006QSZ1	AB		C	Stoper cushion Fax
12	NSFTZ0012QSZZ	AG		C	Clutch shaft
13	XRESP40-06000	AA		C	E-ring
14	LBŌSZ1508FCZZ	AG		C	Cam boss A2
15	MSPRC1316FCZ1	AE		C	MF clutch spring B
16	PPiPP0008QSZZ	AD		C	SPF clutch sleeve
17	NGERH0073QSZZ	AE		C	Clutch gear (20T)
18	LBSHZ0303FCZZ	AC		C	M bushing C
19	MARMP0003QSZ1	AD		C	Stopper arm
20	LSTPP0008QSZZ	AD		C	Paper stopper F
21	RPLU-0017QSZZ	AQ		B	Fax solenoid
22	MLEVP0009QSZZ	AD		C	Set detect lever ACT
23	MLEVP0010QSZZ	AE		C	Open and shut detect lever ACT
24	MSPRT0067QSZ1	AB		C	Solenoid arm spring
25	MARMP0002QSZZ	AD		C	Solenoid arm
26	LPLTP0150QSZZ	AG		C	Fax filter base
27	MLEVP0011QSZ1	AE		C	Setdetect lever B4
28	LFRM-0033QSZZ	AP		D	Paper feeding frame
29	PTME-0019QSZZ	AD		C	Clutch pawl
30	MSPRT0066QSZ1	AC		C	Clutch pawl spring
31	XBPSD30P06KS0	AA		C	Screw (3×6K)
32	NPLYZ0010QSZZ	AE		C	20MXL pulley
37	DHAi-0160QSZZ	AH		C	Sensor harness
39	DHAi-0159QSZ1	AN		C	Fax OP harness
40	CPWBF0009QS52	AU		E	Fax sensor PWB
41	XEBSD30P08000	AA		C	Screw (3×8)
42	MARMP0004QSZZ	AF		C	Pick up arm
44	MSPRC0115QSZZ	AB		C	Paper feeding spring
45	NGERH0992FCZZ	AB		C	Gear (20T)
46	NRŌLR0922FCZZ	AR		C	Manual paper feed roller
47	XPSSP20-07000	AA		C	Spring pin (ϕ2-7)
48	NSFTZ0011QSZZ	AG		C	Paper feeding shaft
49	NRŌLP0024QSZZ	AL		C	Pick up roller
50	XRESP30-06000	AA		C	E-ring
51	NGERH0990FCZZ	AB		C	Gear (16T)
52	LBSHZ0006QSZZ	AC		C	M bushing 2
53	PSHEZ0188QSZ2	AL		D	Ten key sheet F (France)
	PSHEZ0188QSZ1	AL		D	Ten key sheet G (Germany,Switzrland)
	PSHEZ0188QSZ3	AL		D	Ten key sheet I (Italy)
	PSHEZ0188QSZ4	AL		D	Ten key sheet S (Spain)

7 Fax SPF panel & pick up unit(AR-F152)

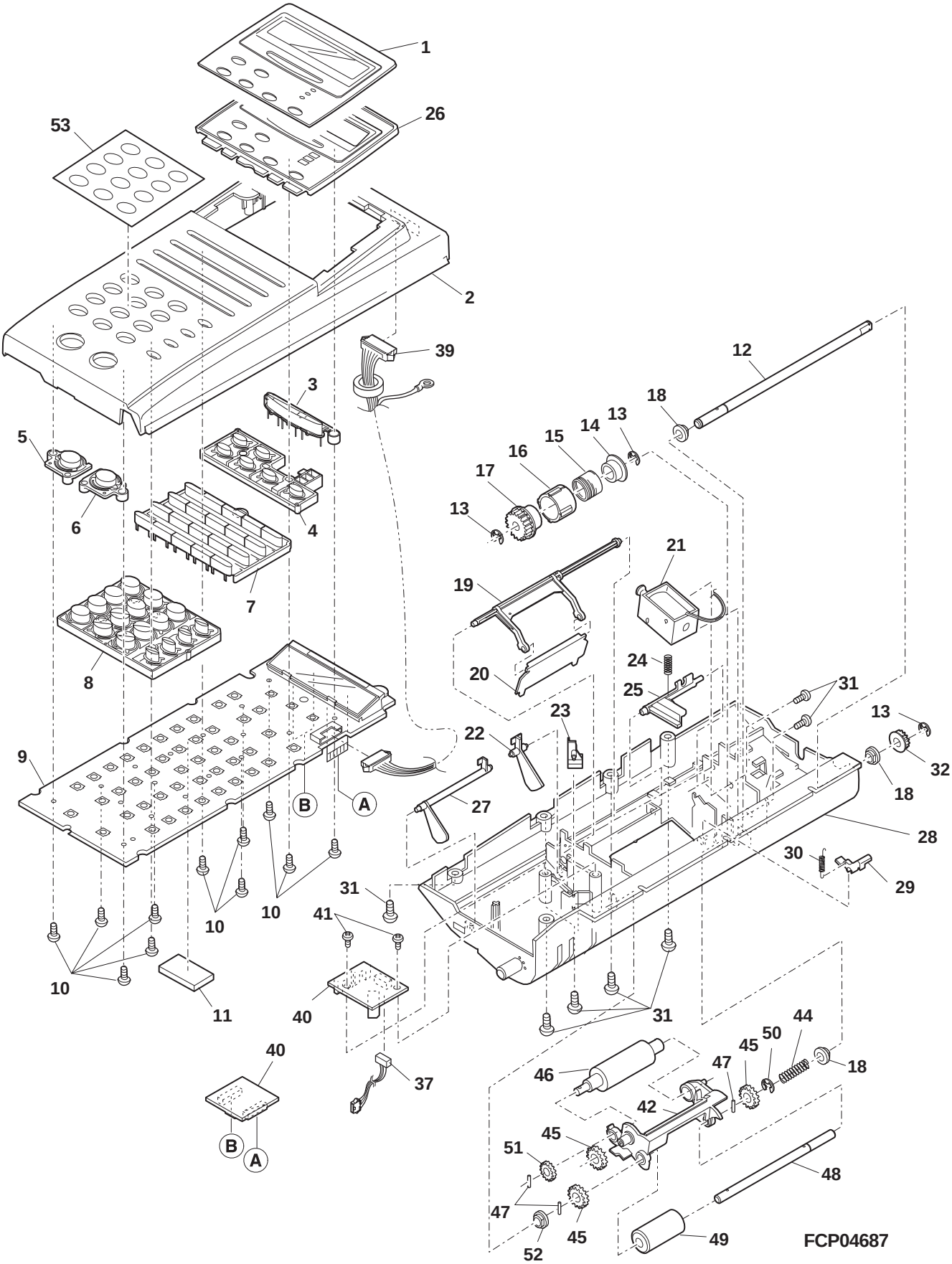

8 Fax SPF transport unit(AR-F152)

NO.	PARTS CODE	PRICE RANK	NEW MARK	PART RANK	DESCRIPTION
1	LPLTM0146QSZZ	AD		C	PG reinforce plate
2	XEBSD30P08000	AA		C	Screw (3×8)
3	PGiDM0058QSZZ	AK		C	U-turn paper guide
4	XEBSD30P12000	AA		C	Screw (3×12)
5	VSP50PB518P／／	AL		B	Speaker unit
6	XEPSD30P08X00	AA		C	Screw (3×8X)
7	PCŌVP0043QSZZ	AL		D	Rear cover
8	PCŌVP0042QSZZ	AH		D	Front cover
9	RMŌTP0013QSZZ	BB		B	SPF motor
10	LFRM−0013QSZZ	AG		D	Drive frame
11	MARMP0001QSZZ	AF		C	Drive arm
12	NGERH0972FCZZ	AB		C	Gear (27T)
13	LX−BZ0012QSZZ	AC		C	Screw
14	LBNDJ0013FCZ1	AA		C	Wire band
15	MSPRT0064QSZ1	AC		C	Drive arm spring
16	XEBSD30P08000	AA		C	Screw (3×8)
17	XBPSD30P05K00	AA		C	Screw (3×5K)
18	NBLTT0006QSZZ	AG		B	Belt (83MXL4.8)
19	XRESP50−06000	AA		C	E-ring
20	PSHEP3029FCZZ	AA		C	Flange sheet DUP2
21	NGERH0047QSZZ	AF		C	Gear (48T/15T)
22	XPSSP20−09000	AA		C	Spring pin (ϕ2-9)
23	NBRGC0017QSZZ	AC		C	Bearing (B-F6-10)
24	XEBSD30P08000	AA		C	Screw (3×8)
25	NBRGM0501FCZZ	AB		C	Metal D-N
26	LFRM−0012QSZZ	AD		D	Frame R
27	PGiDM0024QSZ2	AQ		C	Transport PG
28	MSPRC0063QSZZ	AB		C	Delivery PG spring
29	NRŌLM0023QSZZ	AP		C	Delivery roller
30	NRŌLM0022QSZZ	AP		C	PS roller
31	PSHEZ0164QSZZ	AF		C	White sheet
32	PGiDH0029QSZZ	AL		C	Delivery paper guide
33	PBRSR0003QSZ1	AK		B	Discharge brush
34	DHAi−0161QSZ5	BA		C	SPF interface harness
35	JKNBZ0004QSZZ	AD		C	JAM release knob
37	NBLTT0003QSZZ	AG		B	Belt (91MXL4.8)
38	NPLYZ0146FCZZ	AB		C	Pulley (22MXL)
41	MSPRP0065QSZZ	AD		C	Open and shut lock spring
42	PSHEZ2174FCZZ	AB		C	Paper feeding sheet
43	LPLTP0013QSZZ	AD		C	Plate
44	PSHEZ0039QSZZ	AG		C	Plape
45	MSPRC0062QSZZ	AC		C	Pressure spring
46	RDTCT0004QSZZ	AL		B	Inlet detect sensor
47	DHAi−0162QSZZ	AE		C	Speaker harness
50	PTUBP0119FCZZ	AB		C	MC protect tube

8 Fax SPF transport unit(AR-F152)

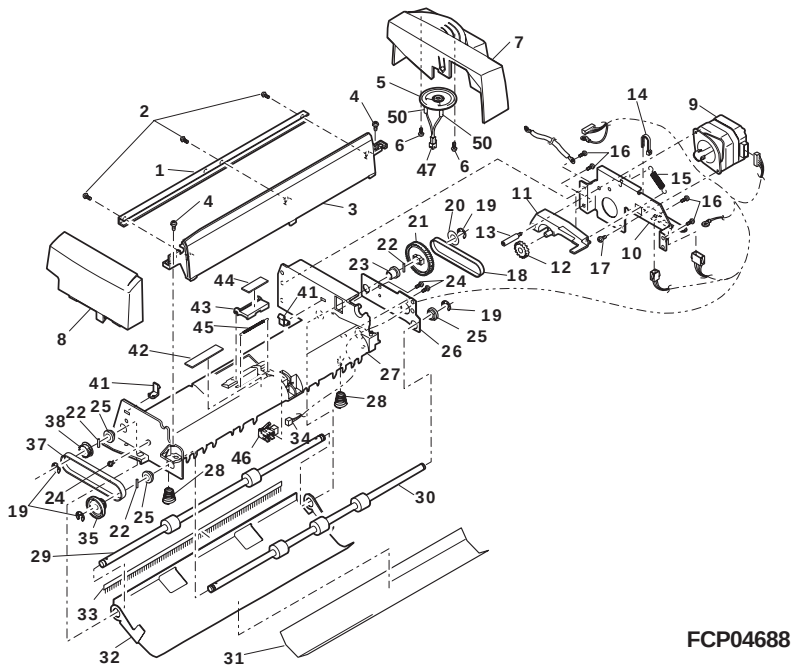

9 Operation panel

NO.	PARTS CODE	PRICE RANK	NEW MARK	PART RANK	DESCRIPTION
1	PFiLZ0006QSZ7	AS		D	Operation filter (AR-F152)
	PFiLZ0007QS16	AS		D	Operation filter (AR-156)[Inch series]
	PFiLZ0007QS20	AS		D	Operation filter (AR-156)[AB series]
	PFiLZ0007QS19	AS		D	Operation filter (AR-151)[AB series]
	PFiLZ0007QS15	AS		D	Operation filter (AR-151)[Inch series]
	PFiLZ0007QS17	AS		D	Operation filter (AR-121E/AR-151E)[AB series]
	PFiLZ0007QS21	AS	N	D	Operation filter (AR-121E/AR-151E)[Inch series]
2	CBTN-0009QS01	AG		E	Copy key
3	JBTN-0010QSZZ	AC		C	Copy key smoke
4	JBTN-0005QSZZ	AC		C	% Key
5	CBTN-0004QS06	AG		E	Operation key R
6	JBTN-0008QSZ2	AF		C	Operation key L
7	MSPRP0015QSZZ	AC		C	Operation PWB earth spring
8	CPWBF0014QS59	BQ		E	Operation PWB (AR-F152)
	CPWBF0014QS56	BA		E	Operation PWB (AR-156)
	CPWBF0014QS62	BA		E	Operation PWB (AR-151)
	CPWBF0014QS51	BR		E	Operation PWB (AR-121E/AR-151E)
9	XEBSE30P08000	AA		C	Screw (3×8)
10	CPNLC0002QS0K	AT		D	Operation panel (AR-121E)
	CPNLC0002QS0L	AT		D	Operation panel (AR-151E)
	CPNLC0002QS0J	AT		D	Operation panel (AR-F152)
	CPNLC0002QS0G	AT		D	Operation panel (AR-151)
	CPNLC0002QS0H	AT		D	Operation panel (AR-156)
11	XEBSE30P06000	AA		C	Screw (3×6)

9 Operation panel

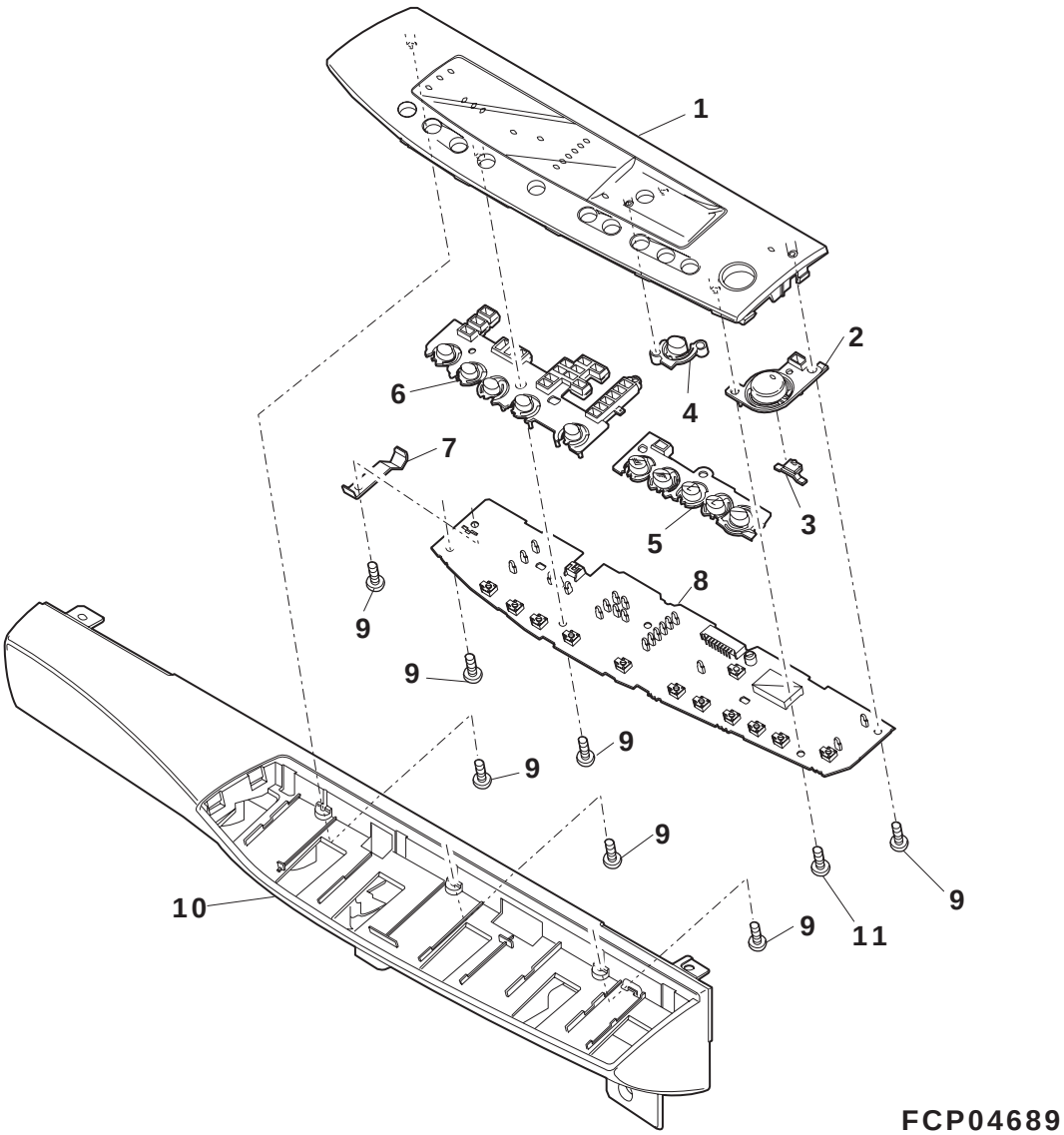

10 Side door unit

NO.	PARTS CODE	PRICE RANK	NEW MARK	PART RANK	DESCRIPTION	
1	GCAB−0007QSZZ	AU		D	Side door	(Except AR-156)
	GCAB−0007QSZ1	AU		D	Side door	(AR-156)
2	PTME−0004QSZZ	AG		C	Lock pawl	
3	MSPRT0029QSZZ	AC		C	Lock pawl spring	
4	PGiDM0008QSZZ	AD		C	Hinge guide	
5	LPLTM0043QSZZ	AD		C	Earth plate	(Except AR-156)
	LPLTM0132QSZZ	AH		C	Earth plate	(AR-156)
6	MSPRD0076QSZ1	AD		C	Earth spring	
7	XHBSE30P06000	AA		C	SCrew (3×6)	
8	XEBSE30P06000	AA		C	Screw (3×6)	
9	LFRM−0003QSZ1	AP		D	Side door inner frame	(Except AR-156)
	LFRM−0003QSZ2	AP		D	Side door inner frame	(AR-156)
10	XEBSD30P10000	AA		C	Screw (3×10)	
11	MSPRC0032QSZZ	AB		C	Transcription pressure spring	
12	DHAi−0047QSZZ	AH		C	TCFB harness	
13	MSPRC0031QSZZ	AB		C	PS earth spring	
14	MSPRC0030QSZZ	AC		C	PS pressure spring	
15	NSFTZ0006QSZ1	AG		C	PS shaft	(Europe,LAG4)
	NSFTZ0006QSZZ	AG		C	PS shaft	Except(Europe,LAG4)
16	XRESP30−06000	AA		C	E-ring	
17	NRŌLP1122FCZZ	AF		C	PS upper roller	
18	CHLDZ0010QS52	AU		E	Transcription holder unit	
21	XEPSD30P08X00	AA		C	Screw (3×8)	(AR-156)
22	NGERH0048QSZZ	AE		C	DUP drive gear	(AR-156)
23	NGERH0051QSZZ	AE		C	DUP drive gear A	(AR-156)
24	NRŌLP0025QSZZ	AM		C	DUP drive roller	(AR-156)
25	MSPRC0050QSZZ	AB		C	DUP pressupe spring	(AR-156)
26	NRŌLP1122FCZZ	AF		C	PS upper roller	(AR-156)

10 Side door unit

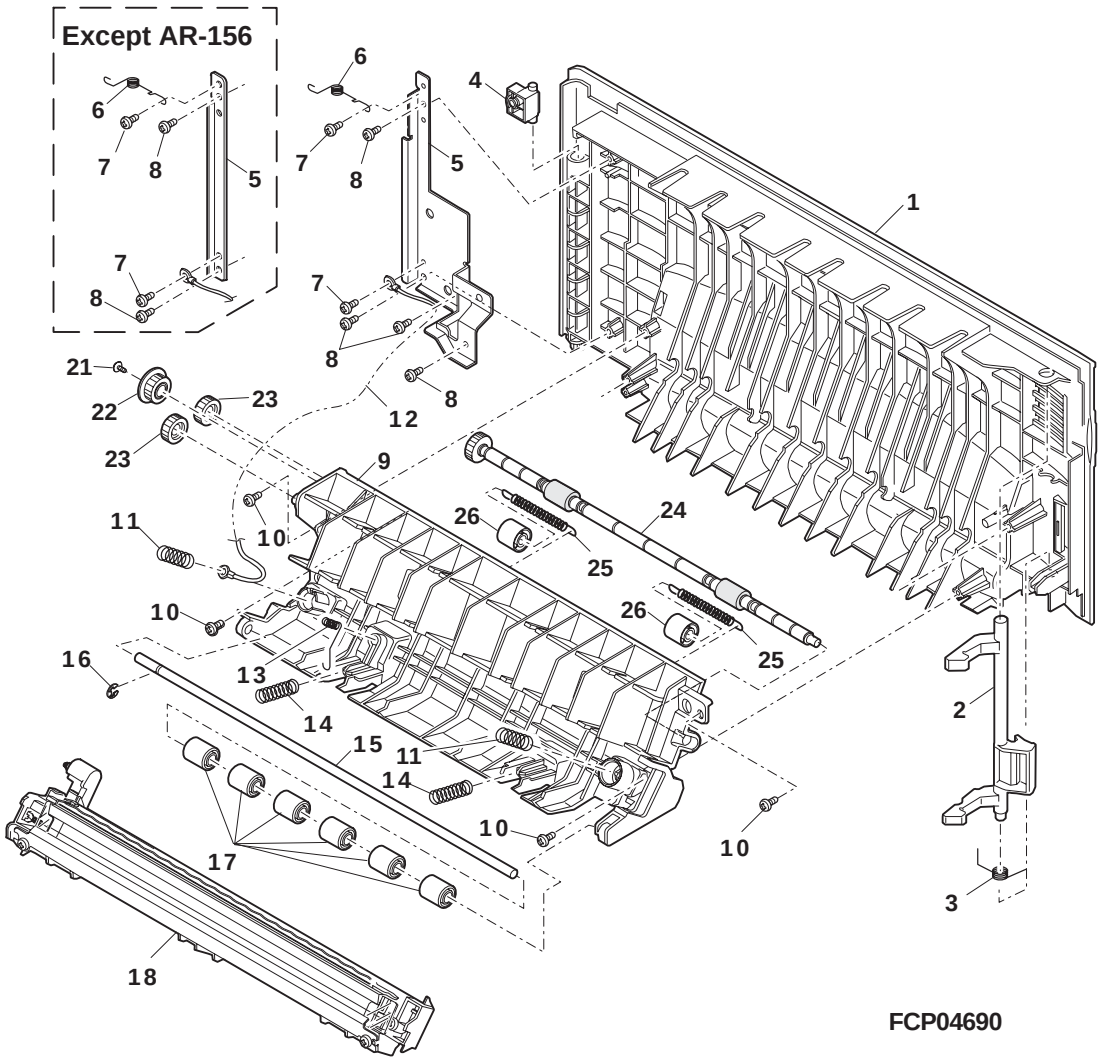

11 Optical frame 1

NO.	PARTS CODE	PRICE RANK	NEW MARK	PART RANK	DESCRIPTION
1	PWiR−0003QSZZ	AR		C	MB wire
2	CHLDZ0019QS31	BC		E	2nd,3rd mirror holder unit
3	CREFL0003QS33	BQ		E	Copy lamp unit
4	LPLTM5111FCZZ	AC		C	Wire fixing plate
5	XBPSD30P05K00	AA		C	Screw (3×5K)
6	DHAi−0041QSZZ	AF		C	CL lead harness
9	NPLYZ0005QSZZ	AG		C	Pulley
10	NPLYZ0006QSZZ	AD		C	L pulley
11	XRESP40−05000	AA		C	E-ring
12	CDAiU0002QS01	BG		D	Optical base plate
13	XHBSE30P06000	AA		C	Screw (3×8)
14	LRALM0003QSZZ	AG		C	MB-B rail R
15	LRALM0002QSZZ	AF		C	MB-B rail F
16	LX−BZ0004QSZZ	AB		C	Screw (M3×6)
17	XRESP70−08000	AA		C	E-ring
18	NGERH0027QSZZ	AH		C	Mirror motor idle gear
19	MSPRC0040QSZZ	AB		C	MB drive spring
20	RMŌTP0011QSZZ	BA		B	Mirror Motor
21	CPLTM0025QS01	AH		C	Mirror motor fixing plate
22	XRESP50−06000	AA		C	E-ring
23	NBRGC0387FCZ1	AC		C	Bearing
24	XPSSJ30−12000	AB		C	Spring pin (ϕ3-12)
25	NPLYZ0004QSZZ	AG		C	Winder drive shaft pulley
26	NBLTT0002QSZZ	AH		B	Winder drive belt
27	LX−BZ0324FCZZ	AA		C	Screw (3×4)
28	NPLYZ0003QSZZ	AM		C	Winder pulley
29	LX−BZ0049FCZZ	AB		C	Screw (4×6)
30	NSFTZ0008QSZZ	AQ		C	Winder drive shaft
31	NBRGC0133FCZ1	AC		C	PF bearing (M8)
32	LX−WZ0119FCZZ	AA		C	Washer

11 Optical frame 1

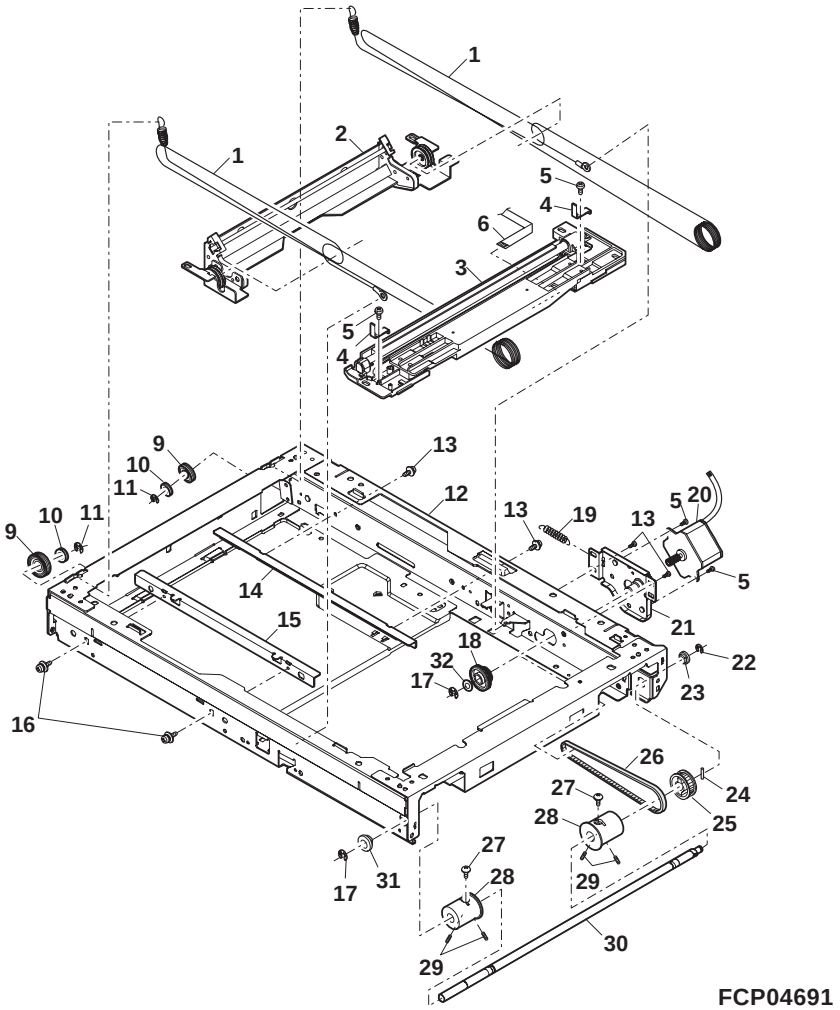

12 Optical frame 2

NO.	PARTS CODE	PRICE RANK	NEW MARK	PART RANK	DESCRIPTION
1	XHBSE30P08000	AA		C	Screw (3×8)
2	PCASZ0003QSZZ	AK		C	Dark box
3	DHAi−0041QSZZ	AF		C	CL lead harness
4	LHLDZ0011QSZZ	AD		C	CL lead holder
5	DHAi−0042QSZZ	AK		C	ICU-CCD harness
6	LX−BZ0004QSZZ	AB		C	Screw (M3×6)
7	CDAiU0008QS59	BP		E	Lens unit (Pakistan,Philippines,Brazil,Saudi arabia, STCL,SRS,SRSSC,Indonesia,Russia,India,Israel)
	CDAiU0008QS51	BC		E	Lens unit (Other countries)
8	XBBSD30P08000	AA		C	Screw (3×8)
9	CPWBF1177FC5A	AG		E	MHPS sensor PWB
10	PGSK−0001QSZZ	AG		C	Gasket (200V Series)
11	PSHEP0042QSZZ	AC		C	Edge protect sheet
12	PGSK−0006QSZZ	AE		C	Gasket (200V Series)Except[AR-151E(Pakistan,Philippens)]
13	PBRSR0002QSZ1	AH		B	Discharge brush
14	CDAiU0002QS01	BG		D	Optical base plate
15	PGiDM0007QSZZ	AP		C	U-turn rib guide upper
17	LPLTM0097QSZZ	AE		C	CCD harness cover
18	LPLTM0098QSZZ	AE		C	CCD PWB cover
20	PSHEZ0066QSZZ	AE		C	Lens base plate lower sheet
21	XEBSE40P12000	AA		C	Screw (4×12)
22	RCŌRF0002QSZZ	AE		C	Ferrite core
23	PGSK−1004DCZZ	AF		C	Gasket
24	PSHEZ0074QSZZ	AE		C	Optical protection sheet
28	PSHEZ0081QSZ1	AD		C	Cabinet hooksheet A
29	PSHEZ0082QSZZ	AB		C	Cabinet hooksheet B
30	PSHEZ0111QSZZ	AC		C	Protection sheet (AR-151/AR-156/AR-F152)
33	PSHEZ0072QSZZ	AE		C	Core holding mylar Except(Europe,LAG4)
36	LHLDW2133SCZZ	AC		C	Locking wire holder (LWS-1M) (AR-151/AR-156/AR-F152)
37	PGiDM0019QSZZ	AH		C	SPF hinge guide L (AR-F152/AR-156)
	PGiDM0059QSZZ	AG		C	Hinge guide L (AR-151)
38	PGiDM0020QSZZ	AH		C	SPF hinge guide R (AR-F152/AR-156)
	PGiDM0060QSZZ	AG		C	Hinge guide R (AR-151)
39	PGUMS0004QSZZ	AA		C	Table glass cushion
40	PCUSS0011QSZZ	AB		C	Glass cution (AR-151/AR-156/AR-F152)
41	XBBSE30P08000	AA		C	Screw (3×8)

12 Optical frame 2

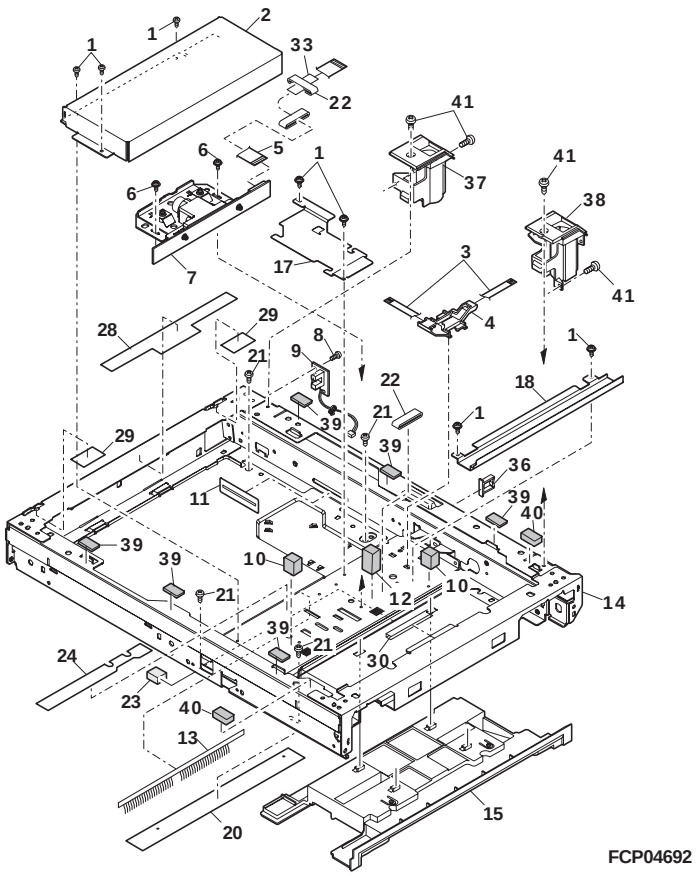

13 LSU unit

NO.	PARTS CODE	PRICE RANK	NEW MARK	PART RANK	DESCRIPTION
1	XEBSD30P12000	AA		C	Screw (3×12)
2	DHAi−0155QSZ1	AT		C	LSU harness
3	LBNDJ0013FCZ1	AA		C	Wire band
4	DUNTK0013QS11	BT		E	LSU unit (A4600D)
5	MSPRT0019QSZZ	AB		C	Delivery paper guide spring

13 LSU unit

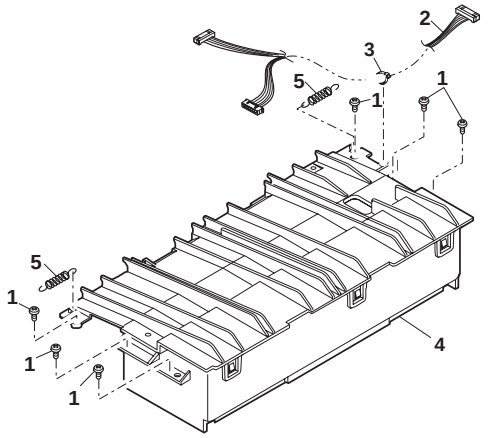

FCP04693

14 Mirror holder unit

NO.	PARTS CODE	PRICE RANK	NEW MARK	PART RANK	DESCRIPTION
1	PSHEZ0048QSZZ	AE		C	Reflector protect sheet
2	LHLDZ0019QSZZ	AN		C	2nd,3rd mirror holder
3	XBPSD40P06KS0	AA		C	Screw (4×6KS)
4	NPLYZ0007QSZZ	AG		C	W pulley
5	LHLDZ0013QSZZ	AD		C	CL guide holder
6	XEBSD40P06000	AA		C	Screw (4×6)
7	CSLi−0103FC31	AF		D	Slider (4pcs/set)
8	LX−BZ0335FCZZ	AA		C	Screw (4×6)(Red)
9	CPLTM0029QS01	AH		C	Pulley fixing plate R
10	PCUSS0009QSZZ	AA		C	MB-B cushion R
11	LFiX−0284FCZZ	AC		C	Mirror fixing plate
12	PMiR−0002QSZZ	AN		B	2nd,3rd mirror
13	CPLTM0028QS01	AH		C	Pulley fixing plate F
14	PCUSS0201FCZZ	AA		C	MB-B cushion
	(Unit)				
901	CHLDZ0019QS31	BC		E	2nd,3rd mirror holder unit

14 Mirror holder unit

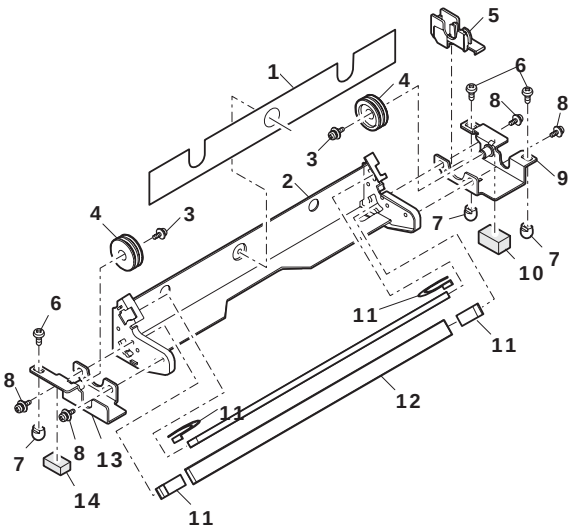

FCP04694

15 Deliyvery paper guide unit

NO.	PARTS CODE	PRICE RANK	NEW MARK	PART RANK	DESCRIPTION
1	NRŌLP0046QSZZ	AC		C	Delivery roller upper
2	MSPRT0020QSZZ	AB		C	Delivery roller spring
4	CPWBF1177FC57	AG		E	POD sensor PWB
5	MLEVP0005QSZZ	AD		C	Delivery actuator
6	PGiDM0006QSZ2	AM		C	Delivery paper guide
7	MSPRC0021QSZZ	AB		C	Delivery transport roller spring
8	NRŌLP1122FCZZ	AF		C	PS upper roller
9	MSPRC0022QSZ1	AC		C	Delivery earth spring
10	DHAi−0168QSZZ	AK		C	OP harness (AR-156)
	DHAi−0040QSZZ	AK		C	OP harness (Except AR-156)
11	PSHEZ0080QSZZ	AE		C	OP harness core holding mylar
12	RCŌRF0002QSZZ	AE		C	Core
13	PTUBP0005QSZZ	AC		C	Tube (AR-156)
14	DHAi−0155QSZ1	AT		C	LSU harness

16 Middle frame

NO.	PARTS CODE	PRICE RANK	NEW MARK	PART RANK	DESCRIPTION
1	NRŌLP0007QSZ1	AQ		C	Delivery roller lower
2	NBRGC0579FCZZ	AE		C	Roller bearing
3	NRŌLP0012QSZ1	AS		C	Delivery trasport roller lower
4	NPLYZ0001QSZZ	AE		C	Pulley (22T)
5	NBLT−0005QSZZ	AH		B	Delivery roller drive belt
6	LBNDJ0043FCZZ	AA		C	Snap band (SG-130)
7	NCPL−0006QSZZ	AC		C	Hopper cupring S
8	MSPRC0024QSZZ	AA		C	Hopper spring
9	RMŌTD0009QSZZ	AU		B	Toner motor
10	XEBSD30P10000	AA		C	Screw (3×10)
11	XEBSD30P30000	AA		C	Screw (3×30)
12	NFANP0001QSZ1	AX		B	Fan (Europe,LAG4)
	NFANP0005QSZZ	AW		B	Fan Except(Europe,LAG4)
13	LHLDZ0018QSZZ	AE		C	TC high voltage holder
14	QSLP−0006QSZZ	AE		C	BC HV electrode plate
15	XEBSD30P06000	AA		C	Screw (M3×6)
16	QSLP−0005QSZZ	AE		C	TC HV electrode plate
17	XBPSC30P06K00	AA		C	Screw (3×6K)
18	DHAi−0046QSZZ	AH		C	BC harness
19	DHAi−0048QSZZ	AG		C	TC harness
20	NBLTT0001QSZZ	AH		B	Belt 308
21	LFRM−0035QSZZ	AZ		D	Middle frame
22	JKNBZ0001QSZZ	AE		C	Roller rotation knob
23	DHAi−0037QSZ1	AS		C	PPD2 interface harness
24	DHAi−0029QSZZ	AN		C	HL harness 1 (100V Series)
	DHAi−0057QSZZ	AN		C	HL harness 1 (200V Series)
25	PGiDM0009QSZZ	AG		C	Harness guide
26	LPiNS0009QSZZ	AD		C	DV guide pin (Europe,Australia,New Zealand)
	LPiNS0008QSZZ	AD		C	DV guide pin Except(Europe,Australia,New Zealand)
28	LX−BZ3006SC0S	AA		C	Screw (3×6)
29	XBBSD30P08000	AA		C	Screw (3×8)
30	XEBSE40P12000	AA		C	Screw (4×12)
31	LPLTM0133QSZ1	AE		C	DUP motor sink (AR-156)
32	PSPAZ0017QSZZ	AK		C	DUP spacer (AR-156)
33	XEBSD30P10000	AA		C	Screw (3×10) (AR-156)
34	XHBSE30P06000	AA		C	Screw (3×6) (AR-156)
35	RMŌTP0012QSZZ	AW		B	DUP transport motor (AR-156)
36	PSHEZ0156QSZZ	AE		C	Harness protection sheet (AR-156)
37	NBLTT0004QSZZ	AH		B	Belt (AR-156)
38	PSHEZ0155QSZZ	AD		C	Sheet (AR-156)
39	PMLT−0026QSZZ	AC		C	Cushion
40	DHAi−0181QSZZ	AV		C	DVS harness CRSM2
41	LPLTM0149QSZZ	AD		C	Plate fixing connector
42	LX−BZ0020QSZZ	AB		C	Screw
43	LHLDW1334FCZZ	AA		C	Holder
44	XEBSD30P08000	AA		C	Screw (3×10)

15 Deliyvery paper guide unit

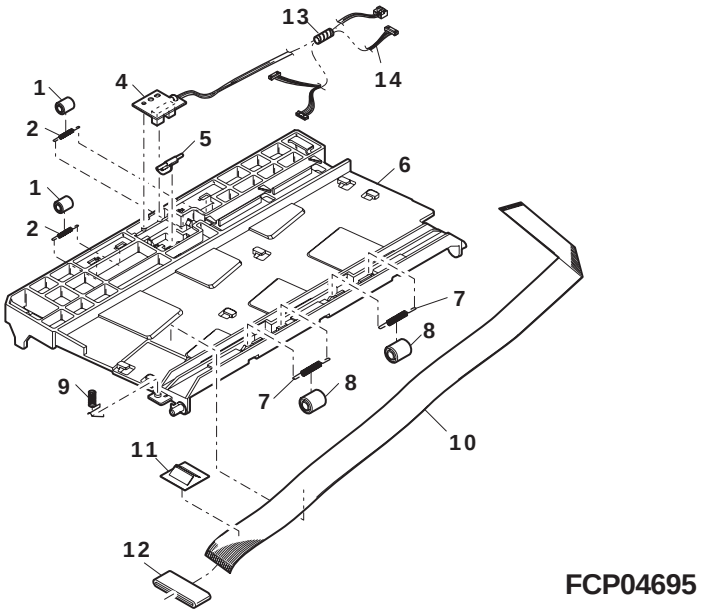

16 Middle frame

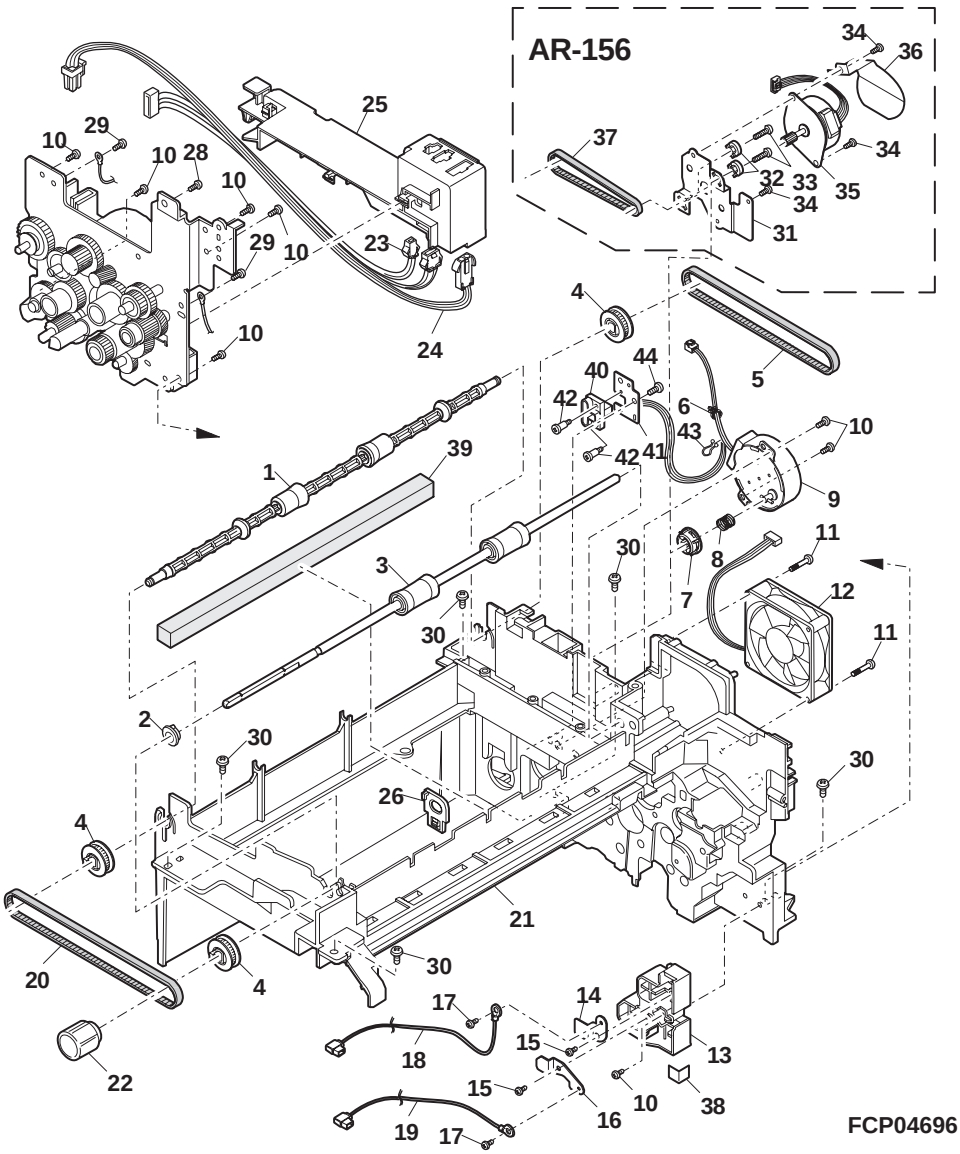

17 Base plate unit 1

NO.	PARTS CODE	PRICE RANK	NEW MARK	PART RANK	DESCRIPTION
1	CPWBF1177FC58	AG		E	PPD1sensor PWB
2	MLEVP0006QSZZ	AD		C	PS front actuator
3	MSPRC0026QSZZ	AB		C	PS front actuator spring
4	XEBSE30P10000	AA		C	Screw (3×10)
5	PGiDM0010QSZ1	AG		C	TC front guide upper
6	XRESP50−06000	AA		C	E-ring
7	NRŌLR0013QSZZ	AQ		C	PS lower roller
8	NBRGC0100FCZ1	AC		C	Bearing 6
9	NGERH0020QSZZ	AG		C	Cluth gear (26T)
10	PPiPP0109FCZ1	AC		C	Pipe A
11	MSPRC1316FCZ1	AE		C	MF clutch spring B
12	XPSSJ20−07000	AA		C	Spring pin (ϕ2-7)
13	LBŌSZ1851FCZZ	AC		C	Clutch boss
14	XRESP40−06000	AA		C	E-ring
15	LBŌSZ1031FCZZ	AC		C	Clutch boss
16	MSPRC0161QSZZ	AF		C	Clutch spring
17	PPiPP0003QSZZ	AD		C	Clutch sleeve
18	NGERH1132FCZZ	AH		C	Clutch gear (29T)
19	NBRGP0562FCZZ	AD		C	Bearing 5
20	CRŌLP0015QS01	AU		C	Paper feeding roller
21	NGERH0022QSZZ	AC		C	Gear (33T)
22	NGERH0026QSZZ	AD		C	Gear (21/29T)
23	NGERH0025QSZZ	AD		C	W gear (30T)
24	CPLTM0024QS01	AG		C	PF plate 2
25	LPLTM0046QSZZ	AE		C	PS earth plate
26	QSW−B0003QSZZ	AF		B	Tray detect switch
27	DHAi−0050QSZZ	AR		C	CED1 harness
28	GDAi−0001QSZZ	BF		D	Base plate
29	PSHEZ2026FCZ1	AB		C	Sheet M1 (AR-151/AR-156/AR-F152)
30	LHLDZ0017QSZZ	AD		C	Pressure plate holder (AR-151/AR-156/AR-F152)
31	MSPRC0047QSZZ	AA		C	Pressure plate spring (AR-151/AR-156/AR-F152)
32	PCŌVP0013QSZZ	AD		D	Malti cover (AR-151/AR-156/AR-F152)
34	LRALP0001QSZZ	AM		C	Base plate rail R
35	XEBSE40P12000	AA		C	Screw (4×12)
36	PSHEZ2174FCZZ	AB		C	Paper feeding sheet (AR-151/AR-156/AR-F152)
37	XBPSD30P08KS0	AA		C	Screw (3×8KS)
38	PCŌVP0007QSZZ	AF		D	Sensor cover
40	XEBSE30P12000	AA		C	Screw (3×12)
41	MSPRC0077QSZZ	AB		C	Front exterior lever spring
42	LPLTM0016QSZZ	AE		C	Front exterior lever plate
43	LX−WZ0023FCZZ	AA		C	Washer
44	XEBSE30P10000	AA		C	Screw (3×10)
45	XEBSE40P12000	AA		C	Screw (4×12)
46	CPLTM0038QS02	AG		C	2nd joint gear fixing plate (AR-151/AR-156/AR-F152)
47	NGERH1169FCZZ	AF		C	2nd joint gear (AR-151/AR-156/AR-F152)
48	XRESP70−08000	AA		C	E-ring
49	MLEVP0048QSZZ	AD		C	Width actuator (AR-F152/AR-151)
50	MSPRD0158QSZZ	AB		C	Width actuator spring (AR-F152/AR-151)
51	LX−WZ2028SCZZ	AA		C	Washer (ϕ12) (AR-F152/AR-151)
52	XEBSD30P08000	AA		C	Screw (3×8) (AR-F152/AR-151)
53	PCŌVP0051QSZZ	AF		D	OP gear cover (AR-151/AR-156/AR-F152)
54	LX−BZ0700FCZZ	AA		C	Screw (AR-151/AR-156/AR-F152)
55	PSHEZ0115QSZ1	AC		C	Sheet (AR-151/AR-156/AR-F152)
56	DHAi−0164QSZZ	AE		C	PSW1 sensor harness (AR-F152/AR-151)
57	QSW−B0003QSZZ	AF		B	Tray detect switch (AR-F152/AR-151)
58	LHLDZ0080QSZZ	AC		C	DV fixing block
59	LPLTM5422FCZZ	AC		C	M4 plate
60	PCŌVP0008QSZZ	AE		C	2nd gear cover (AR-121E/AR-151E)
61	PCŌVP0009QSZZ	AE		C	2nd connector cover (AR-121E/AR-151E)
62	MSPRC0037QSZZ	AB		C	Transport lower roller spring (AR-121E/AR-151E)

17 Base plate unit 1

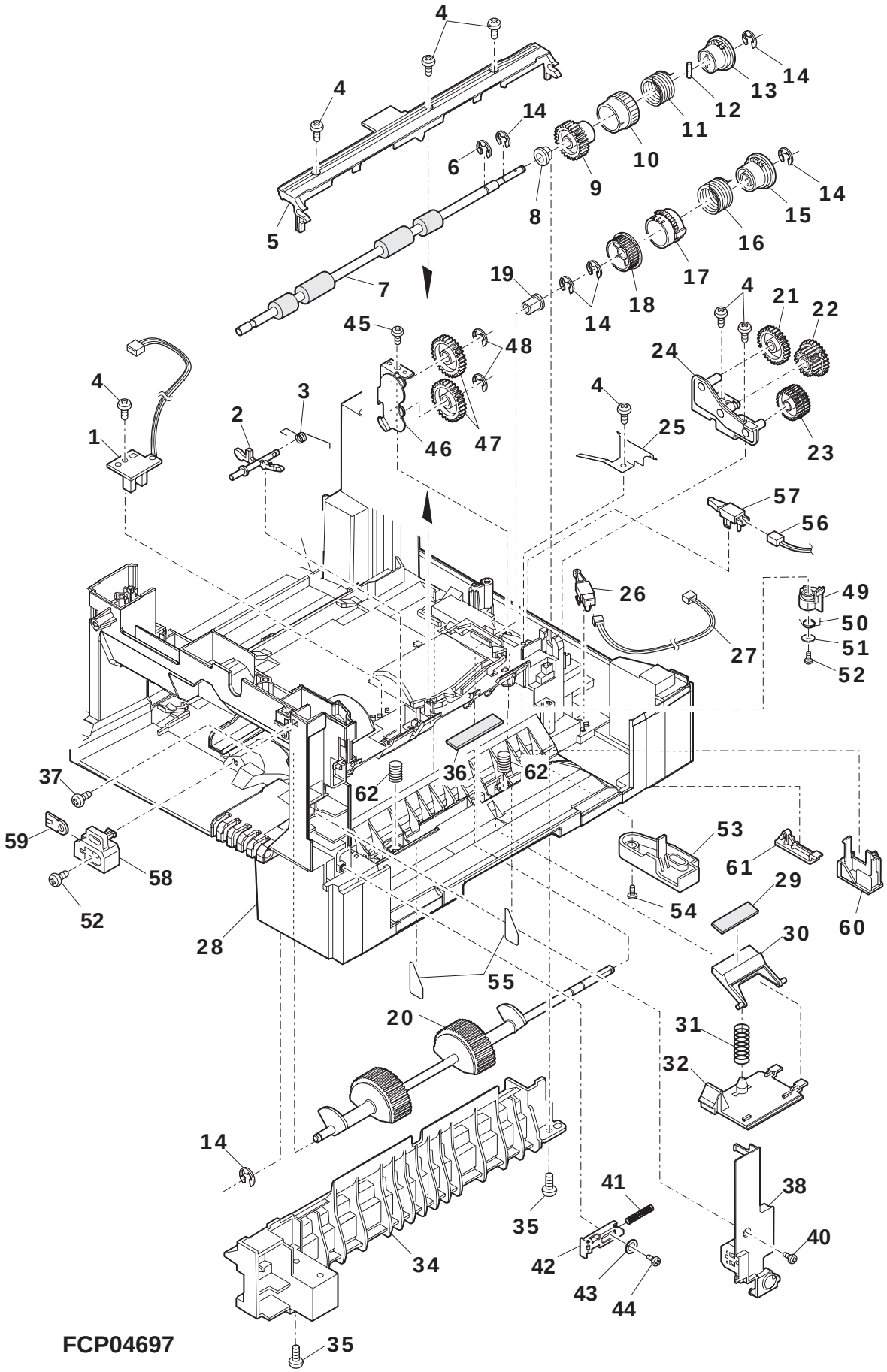

FCP04697

18 Base plate unit 2

NO.	PARTS CODE	PRICE RANK	NEW MARK	PART RANK	DESCRIPTION
1	LHLDZ0050QSZZ	AP		C	PWB holder (AR-151/AR-156/AR-F152)
	LPLTM0017QSZ3	AQ		C	PWB holder (AR-121E/AR-151E)
3	XHBSE30P06000	AA		C	Screw (3×6)
4	CPWBX0038QS3Z	CA		E	MCU PWB (AR-151/AR-156/AR-F152)
	CPWBX0072QSEi	BY	N	E	MCU PWB (AR-121E)
	CPWBX0072QSEJ	BY	N	E	MCU PWB (AR-151E)
5	PCŌVP0044QSZ1	AP		D	PWB cover (AR-151/AR-156/AR-F152)
6	CPWBX0042QS51	BY		E	FAX PWB (AR-F152)
7	PCŌVP0046QSZ4	AE		D	Line cover (AR-F152)
	PCŌVP0046QSZ3	AE		D	Line cover (AR-151/AR-156)
8	PFTA-0003QSZZ	AF		D	PWB cover cap (AR-151/AR-156/AR-F152)
9	PCŌVP0045QSZ1	AK		D	PWB cover (AR-F152)
10	CPWBF0013QS52	BL		E	GDI memory PWB 6MB (AR-151/AR-156/AR-F152/AR-151E)
11	XESSD30P10000	AA		C	Screw (3×10)
12	DHAi-0029QSZZ	AN		C	HL harness 1 (100V Series)
	DHAi-0057QSZZ	AN		C	HL harness 1 (200V Series)
13	CPWBF0039QS34	BV		E	DC power supply PWB (200V Series)[AR-151/AR-156/AR-F152]
	CPWBF0039QS32	BU		E	DC power supply PWB (100V Series)[AR-151/AR-156]
	CPWBF0017QS37	BU		E	DC power supply PWB (200V Series)[AR-121E/AR-151E]
	CPWBF0017QS32	BU		E	DC power supply PWB (100V Series)[AR-121E/AR-151E]
14	XEBSE30P10000	AA		C	Screw (3×10)
15	XEBSE40P12000	AA		C	Screw (4×12)
16	DHAi-0179QSZZ	AN		C	SDOD harness (AR-151/AR-156/AR-F152)
17	GDAi-0001QSZZ	BF		D	Base plate
18	GLEGG0064FCZZ	AC		C	Rubber foot
21	LPLTM0020QSZZ	AL		C	Base plate reinforce plate F
25	PSHEZ0163QSZ1	AC		C	PWB cover sheet (AR-151/AR-156/AR-F152)
32	LBNDJ0013FCZ1	AA		C	Wire band
33	RCŌRF0003QSZZ	AL		C	Core (AR-151/AR-156/AR-F152)
34	PMLT-0028QSZZ	AC		C	Harness fixing cushion [(AR-151/AR-156/AR-F152)Europe,LAG4](AR-121E/AR151E)
	PMLT-0037QSZZ	AD		C	Harness fixing cushion (AR-151/AR-156)Except[Europe,LAG4]
35	PSHEZ0195QSZZ	AD		C	Mylar
36	LBSHZ0005QSZZ	AC		C	Bush (AR-151/AR-156/AR-F152)
37	LPLTM0088QSZZ	AN		C	PWB cover (AR-121E/AR-151E)
38	LPLTM0089QSZZ	AH		C	PWB cover (AR-121E/AR-151E)
39	XBBSE30P08000	AA		C	Screw (AR-121E/AR-151E)
40	DHAi-0039QSZZ	BD		C	Center frame harness (100V series)[AR-121E/AR-151E]
	DHAi-0064QSZ2	AV		C	Center frame harness (200V series)(AR-121E/AR-151E)
	DHAi-0163QSZZ	AS		C	Center frame harness (AR-151/AR-156/AR-F152)
41	DHAi-0169QSZZ	AQ		C	2nd interface harness (AR-151/AR-156/AR-F152)
501	DUNT-0084QS13	AU		E	DSP sensor (AR-F152/AR-156)

18 Base plate unit 2

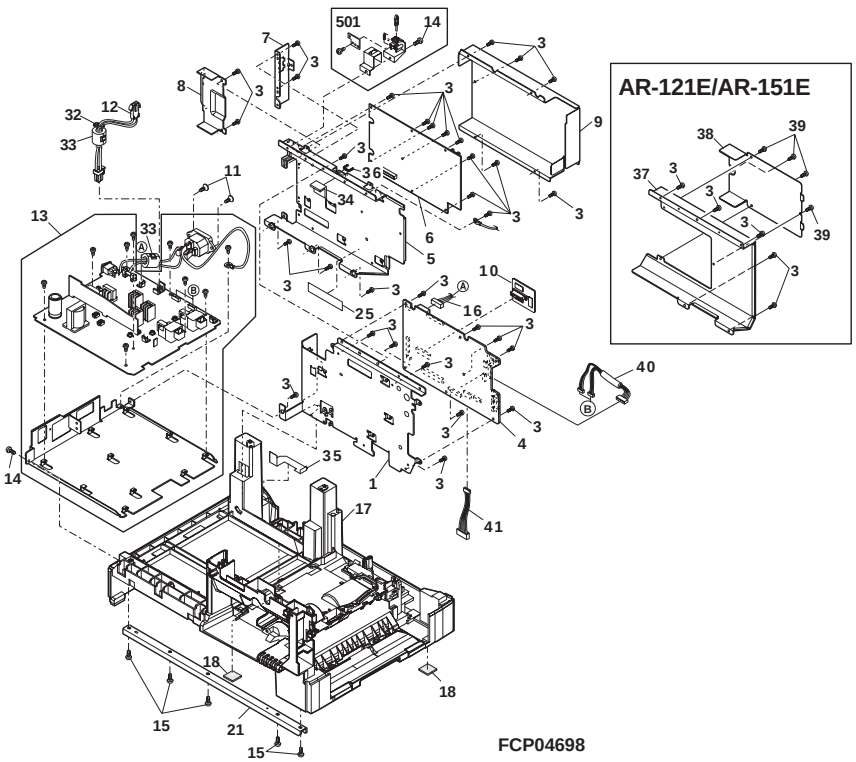

19 Fusing unit

NO.	PARTS CODE	PRICE RANK	NEW MARK	PART RANK	DESCRIPTION
1	PGiDM0023QSZZ	AP		C	U-turn guide lower
2	VRH−ST2HB157K	AD		C	Resistor (1/2W 150MΩ)
3	PWiR−0001QSZZ	AF		C	HR earth wire
4	PBRSR0004QSZZ	AE		B	Discharge brush FU
5	PCŌVP0010QSZZ	AG		D	Fusing cover F
6	MSPRP0033QSZZ	AD		C	Copy lamp spring F
7	LFRM−0004QSZZ	AV		D	Fusing upper frame
8	LX−BZ0010QSZZ	AB		C	Screw (3×6)
9	RDTCT0128FCZZ	AR		B	Thermistor
10	XBPSD30P10KS0	AB		C	Screw (3×10KS)
11	CTME−0229FC03	AG		C	Separator pawl
12	CTHM−0019FC52	AU		E	FU thermostat unit
13	CPWBF1177FC59	AG		E	PPD2 sensor PWB
14	MSPRP0034QSZZ	AE		C	Copy lamp spring R
15	PCŌVP0011QSZZ	AK		D	Fusing cover R
16	DHAi−0030QSZ1	AN		C	HL harness 2 (100V Series)
	DHAi−0058QSZ1	AL		C	HL harness 2 (200V Series)
17	LBNDJ0013FCZ1	AA		C	Wire band [Europe](Except U.Kingdom)[LAG4]
	LBNDJ0067FCZZ	AC		C	Wire band (Other countries)
18	LSTPP0116FCZZ	AA		C	Roller stopper
19	NGERH0540FCZ3	AD		C	Fushing gear (45T)
20	NBRGP0567FCZZ	AG		C	Fusing bearing
21	NRŌLi0014QSZ2	AZ		C	Heart roller
⚠ 22	RLMPU0010QSZZ	BA		B	Heater lamp (100V Series)
⚠	RLMPU0011QSZZ	BA		B	Heater lamp (200V Series)
23	MLEVP0015QSZZ	AF		C	Pressure lever R
24	NBRGP0260FCZ1	AD		C	Pressure bearing N
25	MSPRC0055QSZZ	AC		C	Pressure spring
26	LX−WZ0313FCZZ	AA		C	Washer
27	NRŌLR0028QSZZ	AZ		C	Pressure roller
28	MLEVP0014QSZZ	AF		C	Pressure lever F
29	LPLTM0022QSZ2	AF		C	Scraper
30	LFRM−0005QSZZ	AQ		D	Fusing lower frame
31	XEBSE30P12000	AA		C	Screw (3×12)
32	TCAUH0991FCZZ	AE		D	High voltage caushion label [Australia,New Zealand]
	TCAUH0992FCZ1	AF		D	High temperature caushion label [Other countries]
33	PSHEZ0045QSZ1	AC		C	PG earth sheet
34	PGiDH0026QSZZ	AE		C	Fusing front paper guide
35	PSHEP0023QSZZ	AF		C	Fusing front PG sheet
36	LX−BZ0735FCZZ	AA		C	Screw
37	MSPRT0054QSZZ	AC		C	Gate spring
38	LPLTP0009QSZZ	AS		C	Turn over gate
39	XRESP30−04000	AA		C	E-ring
40	PSHEP0047QSZZ	AC		C	Handle label
41	XEBSE30P08000	AA		C	Screw (3×8)
42	LX−BZ0011QSZZ	AB		C	Screw
	(Unit)				
901	DUNTW0014QS22	BT		E	Fusing unit (100V Series)
	DUNTW0014QS23	BT		E	Fusing unit (200V Series)[U.Kingdom,Australia,New Zealand]
	DUNTW0014QS24	BT		E	Fusing unit (200V Series)(Other countries)

19 Fusing unit

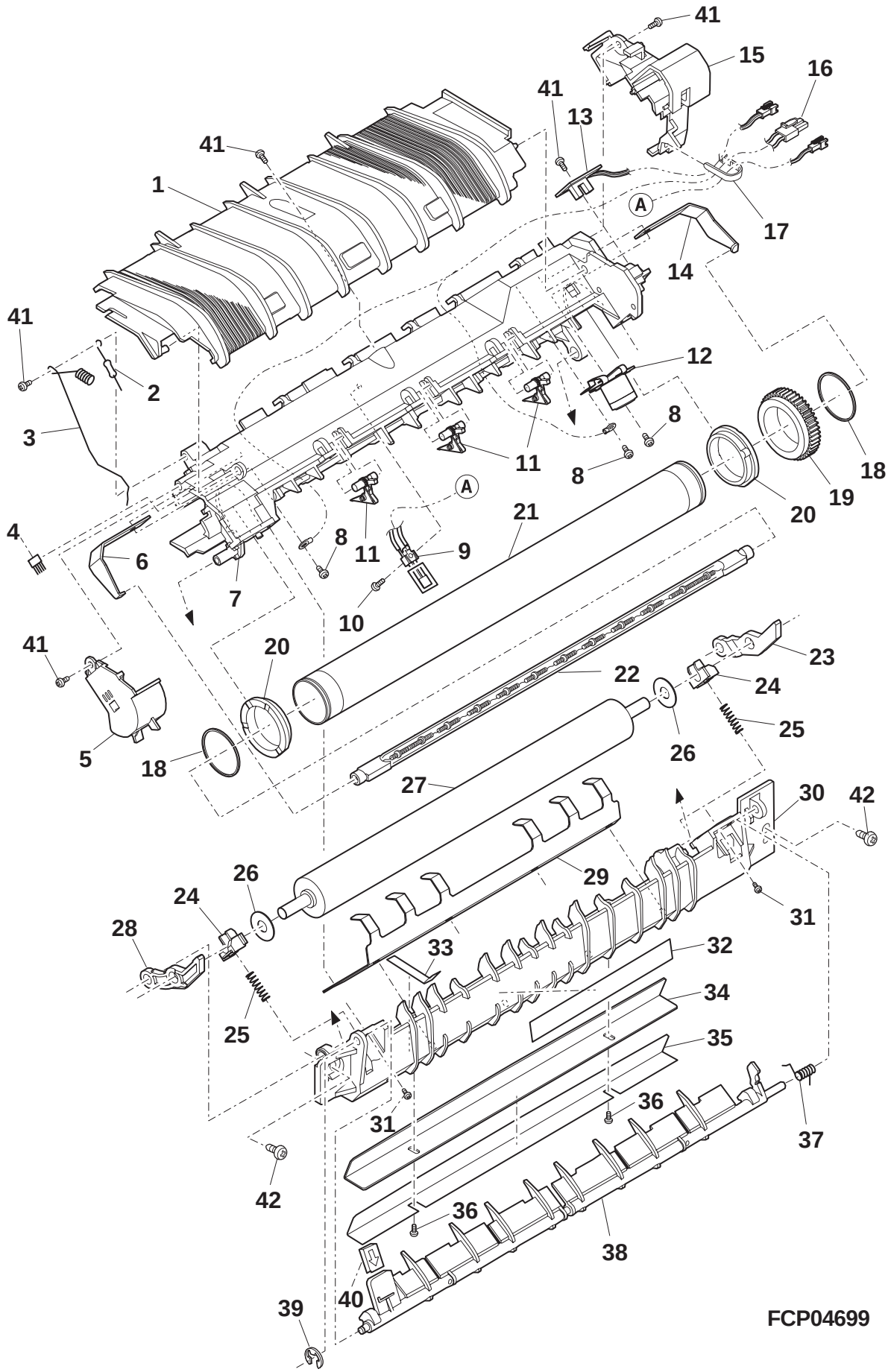

20 Drive unit

NO.	PARTS CODE	PRICE RANK	NEW MARK	PART RANK	DESCRIPTION
1	XBBSD40P06000	AA		C	Screw (4×6)
2	RMŌTP0010QSZZ	BN		B	Main motor
3	MSPRC0053QSZZ	AB		C	Pulley spring (Except AR-156)
4	NGERH0050QSZZ	AD		C	Ratchet gear (33T) (Except AR-156)
5	NPLYZ0002QSZZ	AC		C	Pulley (17T) (Except AR-156)
6	NGERH0010QSZZ	AD		C	Gear (28T)
7	NGERH0009QSZZ	AD		C	Gear (46/16T)
8	NGERH0014QSZZ	AD		C	Gear (30/15T)
9	CGERH0011QS51	AE		E	MG gear unit
10	NGERH0015QSZZ	AD		C	Gear (37/15T)
11	NGERH0007QSZZ	AH		C	Gear (68/26T)
12	NGERH0016QSZZ	AD		C	Cupring gear (34T)
13	NGERH0019QSZZ	AD		C	Ratchet gear (21T)
14	NGERH0018QSZZ	AC		C	Ratchet gear (28T)
15	MSPRC0023QSZZ	AB		C	Ratchet spring
16	NGERH0008QSZ1	AL		C	Gear (55/19T)
17	NGERH0017QSZZ	AD		C	Gear (33/20/15T)
18	NGERH0012QSZZ	AE		C	Gear (20T)
19	NGERH0013QSZZ	AG		C	Gear (31/17T)
20	CPLTM0042QS02	AY		C	Main drive plate
21	XBBSD30P04000	AA		C	Screw (3×4)
22	RPLU−0001QSZZ	AN		B	Solenoid (AR-121E)
	RPLU−0016QSZZ	AN		B	Solenoid (Except AR-121E)
23	MSPRC1318FCZ1	AA		C	Spring B
24	PTME−0002QSZZ	AD		C	PS roller pawl
25	RPLU−0002QSZZ	AN		B	Solenoide
26	PTME−0003QSZ1	AD		C	Roller pawl
27	DHAi−0045QSZZ	AD		C	Main motor harness
28	LANGT0006QSZZ	AC		C	PWB cover earth angle (AR-151/AR-156/AR-F152)
29	XBPSD30P06000	AA		C	Screw (3×6) (AR-151/AR-156/AR-F152)
30	PSHEZ0162QSZZ	AB		C	Harness protect sheet (AR-151/AR-156/AR-F152)
	(Unit)				
901	CPLTM0042QS54	BV		E	Drive unit (AR-F152/AR-151/AR-151E)
	CPLTM0042QS53	BV		E	Drive unit (AR-156)
	CPLTM0042QS51	BP		E	Drive unit (AR-121E)

20 Drive unit

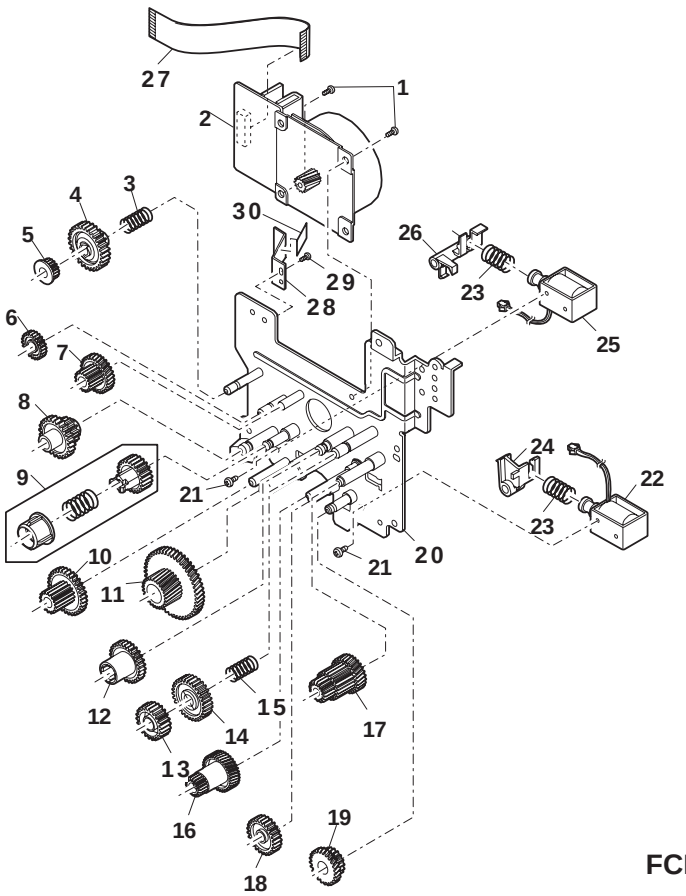

FCP04700

21 Single Manual Paper Feeding cover unit(AR-121E/AR-151E)

NO.	PARTS CODE	PRICE RANK	NEW MARK	PART RANK	DESCRIPTION
1	CCLEZ0005QS51	AQ		E	Charger cleaner unit
2	XEBSE30P08000	AA		C	Screw (3×8)
3	PCŌVP0012QSZ1	AK		C	Single upper cover
4	CSW-M0004QS51	AS		E	Side door detect switch unit
5	XEPSD20P18000	AB		C	Screw (2×18)
6	MSPRP0110QSZ1	AD		C	Door switch spring
7	TCAUH0007QSZZ	AD		C	Laser caution label

21 Single Manual Paper Feeding cover unit(AR-121E/AR-151E)

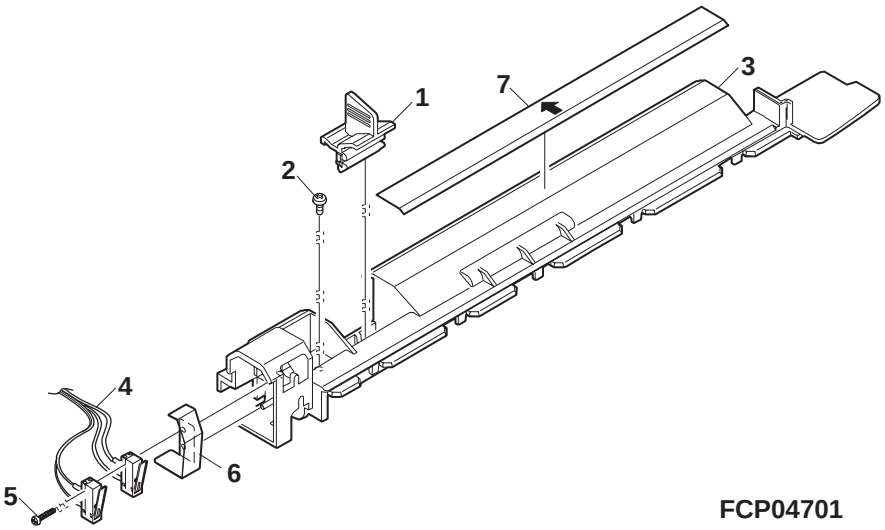

22 Multi Manual paper feeding cover unit(AR-151/AR-156/AR-F152)

NO.	PARTS CODE	PRICE RANK	NEW MARK	PART RANK	DESCRIPTION
1	CCLEZ0005QS51	AQ		E	Charger cleaner unit
2	XEBSE30P08000	AA		C	Screw (3×8)
3	PCŌVP0023QSZ1	AK		D	Multi upper cover
4	CSW-M0004QS51	AS		E	Side door detect switch unit
5	XEPSD20P18000	AB		C	Screw (2×18)
6	MSPRP0110QSZ1	AD		C	Door switch spring
7	PSHEZ0075QSZZ	AC		C	MB upper guide sheet
8	TCAUH0007QSZZ	AD		C	Laser caution label

22 Multi Manual paper feeding cover unit(AR-151/AR-156/AR-F152)

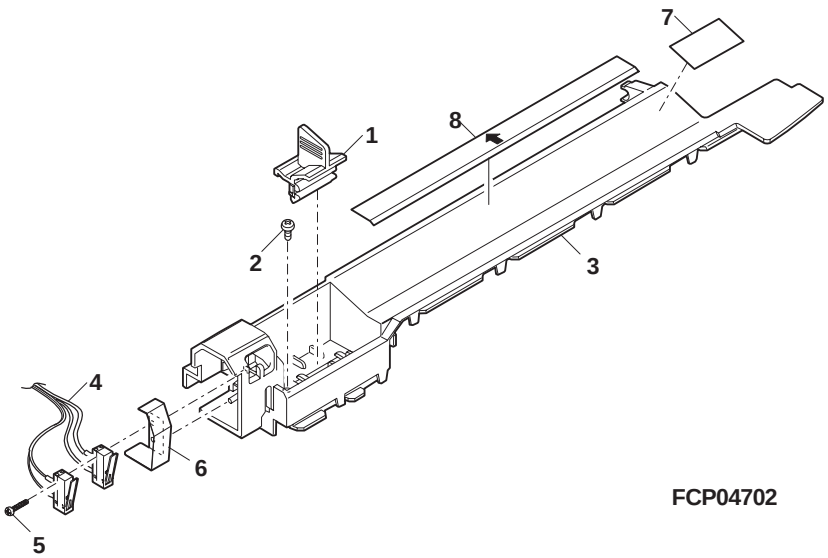

23 Single Manual Paper Feeding unit(AR-121E/AR-151E)

NO.	PARTS CODE	PRICE RANK	NEW MARK	PART RANK	DESCRIPTION
1	CPWBF1177FC5B	AG		E	MFD sensor PWB
2	DHAi−0066QSZZ	AD		C	Manual feed earth harness
3	LBNDJ0013FCZ1	AA		C	Wire band
4	XHBSE30P06000	AA		C	Screw (3×6)
5	CPLTM0023QS02	AF		C	SB plate 1
6	NGERH0972FCZZ	AB		C	Gear (27T)
7	XRESP40−06000	AA		C	E type ring
8	XEBSE30P08000	AA		C	Screw (3×8)
9	NGERH0990FCZZ	AB		C	Gear (16T)
10	XPSSJ20−07000	AA		C	Spring pin (ϕ2-7)
11	NBRGP0562FCZZ	AD		C	Bearing
12	NRŌLR0016QSZZ	AT		C	MF transport roller
13	LFRM−0006QSZZ	AN		C	Single manual feed frame
14	MSPRC0039QSZ1	AC		C	Earth spring
15	XEBSD30P06KS0	AA		C	Screw (3×6KS)
16	MSPRC0038QSZ1	AC		C	Actuator spring
17	MLEVP0007QSZZ	AD		C	Actuator
18	MSPRC0080QSZZ	AB		C	SB transport earth spring
20	PGiDM0014QSZZ	AF		C	DUP upper guide
21	PGiDM0013QSZZ	AF		C	SB side guide R
22	PGiDM0012QSZZ	AF		C	SB side guide F
23	NSFTZ0007QSZZ	AG		C	Roller shaft
24	NRŌLP1122FCZZ	AF		C	PS upper roller
25	LFRM−0007QSZ2	AK		C	Single manual feed lower frame
26	MSPRC0036QSZZ	AB		C	MF spring
27	NGERH0021QSZZ	AD		C	Manual paper feeding gear
28	XEPSD30P06X00	AA		C	Screw (3×6X)
29	MSPRP0079QSZZ	AD		C	SB earth plate spring
30	XEBSE30P06000	AA		C	Screw (3×6)
31	MSPRD0108QSZZ	AC		C	SB lower earth spring
32	XEBSE40P12000	AA		C	Screw (4×12)
501	CFRM−0007QS51	BF		E	SB manual feeding lower frame unit
502	CFRM−0006QS51	BE		E	Single manual paper feeding unit

23 Single Manual Paper Feeding unit(AR-121E/AR-151E)

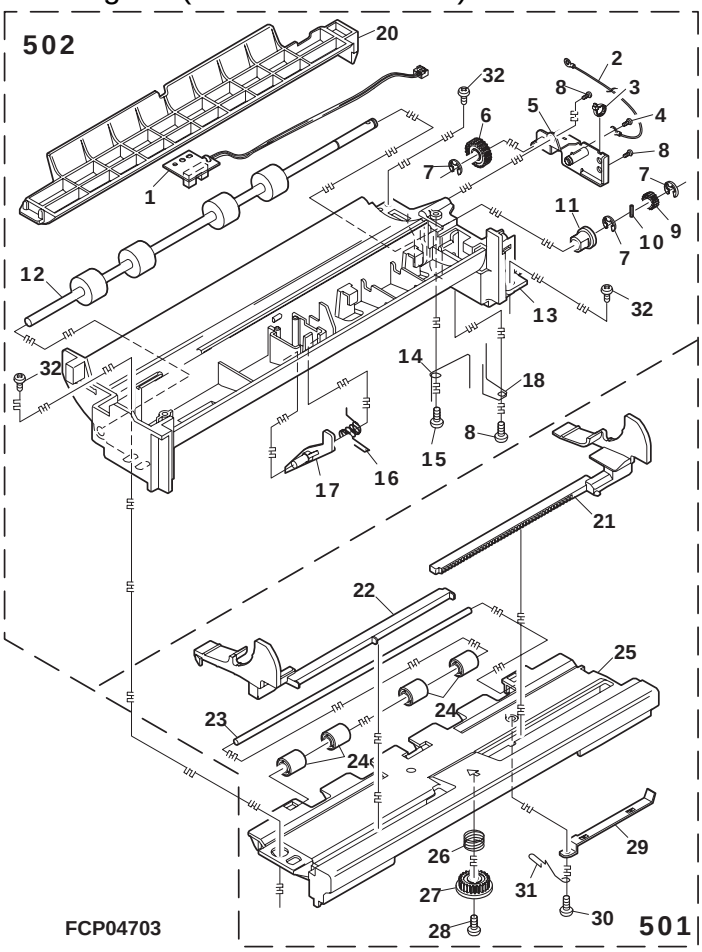

24 Multi Manual paper feeding unit(AR-151/AR-156/AR-F152)

NO.	PARTS CODE	PRICE RANK	NEW MARK	PART RANK	DESCRIPTION
1	NRŌLR0922FCZZ	AR		C	Manual paper feed roller
2	XRESP40−06000	AA		C	E-ring
3	NGERH0992FCZZ	AB		C	Gear (20T)
4	MARMP0173FCZZ	AC		C	Arm C
5	NRŌLP1008FCZZ	AK		C	Roller R
6	XPSSJ20−07000	AA		C	Spring pin (ϕ2-7)
7	NGERH0990FCZZ	AB		C	Gear (16T)
8	NSFTZ2311FCZZ	AU		C	Cam boss A shaft
9	LBSHZ0303FCZZ	AC		C	M bushing C
10	LBRC−0055FCZZ	AK		C	Multi F bracket
11	XEBSE30P08000	AA		C	Screw (3×8)
12	PGiDM0014QSZZ	AF		C	DUP upper guide
13	XEBSD30P06000	AA		C	Screw (M3×6)
14	MSPRC0049QSZZ	AC		C	Manual feeding earth spring
15	LBŌSZ1508FCZZ	AG		C	Cam boss A2
16	MSPRC1315FCZ1	AD		C	Clutch spring A
17	PPiPP0109FCZ1	AC		C	Pipe A
18	LBŌSZ1510FCZZ	AF		C	Cam boss A1
19	NGERH0972FCZZ	AB		C	Gear (27T)
20	NGERH0991FCZZ	AC		C	Gear (20.20MXL)
21	LBNDJ0013FCZ1	AA		C	Wire band
22	DHAi−0066QSZZ	AD		C	Manual feeding earth harness
23	XHBSE30P06000	AA		C	SCrew (3×6)
24	XBPSD30P06KS0	AA		C	Screw (3×6K)
25	CPLTM0023QS03	AG		C	Paper plate 1
26	PPiPP0175FCZZ	AC		C	Pipe B
27	MSPRC1316FCZ1	AE		C	MF clutch spring B
28	LBŌSZ1509FCZ1	AD		C	Cam boss B
29	RPLU−0003QSZZ	AN		B	Multi feeding solenoid
30	MSPRC1318FCZ1	AA		C	Spring B
31	PTME−0179FCZZ	AC		C	Manual paper feeding pawl B
32	PTME−0178FCZ1	AC		C	Manual paper feeding pawl A
33	MSPRC2175FCZZ	AA		C	Pawl A spring
34	XBBSD30P08000	AA		C	Screw (3×8)
35	LFRM−0010QSZZ	AN		D	Multi frame
36	XEBSE40P12000	AA		C	Screw (4×12)
37	LSTPP0300FCZZ	AB		C	Stopper plate
38	MARMP0205FCZZ	AF		C	Arm B
39	MARMP0204FCZ1	AF		C	Arm A
40	MHNG−0002QSZZ	AC		C	Arm hinge
41	MSPRC0048QSZZ	AB		C	Arm C spring
42	PGiDM0018QSZZ	AE		C	MB side guide R
43	PGiDM0017QSZZ	AE		C	MB side guide L
44	PCŌVP0019QSZZ	AK		D	Multi tray front cover
46	NGERH0021QSZZ	AD		C	Manual feeding gear
48	LSŌU−0002QSZZ	AL		D	Multi tray 1
49	LSŌU−0003QSZZ	AK		D	Multi tray 2
50	MSPRC0109QSZZ	AC		C	Spring
501	CSŌU−0002QS52	AY		E	Multi manual paper feeding tray unit
502	CFRM−0010QS51	BG		E	Multi manual paper feeding unit

24 Multi Manual paper feeding unit(AR-151/AR-156/AR-F152)

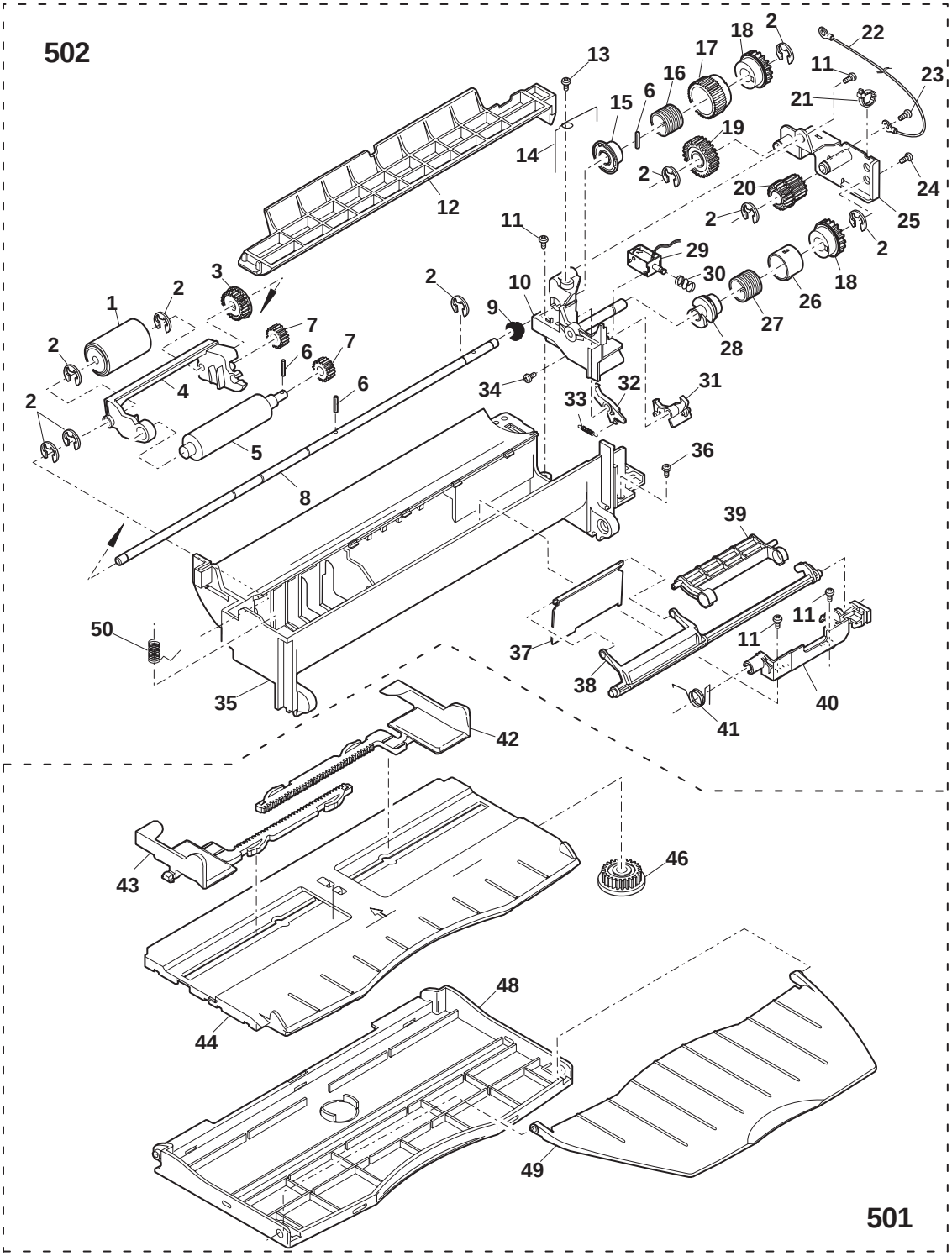

FCP04704

25 Socket holder unit

NO.	PARTS CODE	PRICE RANK	NEW MARK	PART RANK	DESCRIPTION
1	LHLDZ0009QSDZ	AG		C	HV interface holder
2	CHAi-0032QS51	AL		C	MC harness unit
3	CHAi-0028QS51	AL		C	GB-MCFB harness unit
4	XBPSC30P06ES0	AA		C	Screw (3×6ES)
5	MSPRC0017QSZZ	AC		C	HV terminal spring
6	MSPRC0018QSZZ	AC		C	HV terminal spring
7	MSPRC0016QSZZ	AC		C	HV terminal spring
8	XEBSD30P08000	AA		C	Screw (3×8)
9	LBNDJ0013FCZ1	AA		C	Wire band

25 Socket holder unit

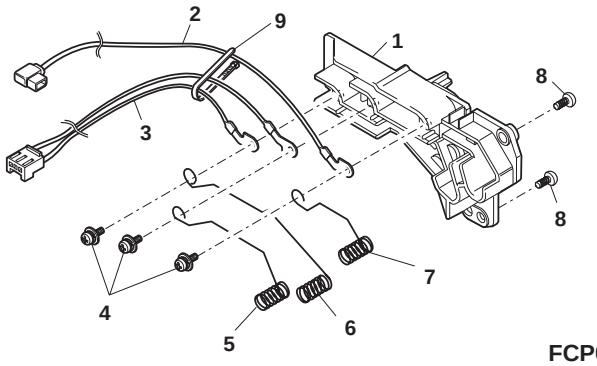

FCP04705

26 TC case unit

NO.	PARTS CODE	PRICE RANK	NEW MARK	PART RANK	DESCRIPTION
1	PSHEZ0018QSZZ	AF		C	Discharge plate sheet
2	PGiDM0011QSZZ	AE		C	Separator guige
3	PSHEP0019QSZ1	AC		C	TC sheet
4	PGiDH0025QSZ1	AG		C	TC front guide
5	XEBSD30P06000	AA		C	Screw (M3×6)
6	PSHEP0021QSZZ	AA		C	TC cover sheet R
7	MSPRT0513FCZ1	AA		C	MC tension spring
8	DWiR-0466CSZZ	BG		B	Charger wire
9	QSLP-0007QSZZ	AC		C	TC electrode plate
10	MSPRC0027QSZZ	AC		C	TC electrode spring
11	MSPRC0028QSZZ	AC		C	BC electrode spring
12	MSPRC0051QSZZ	AA		C	Front guide earth spring
13	PSHEP0020QSZZ	AB		C	TC cover sheet F
14	LHLDZ0010QSZ1	AL		C	TC holder
15	LFiX-0004QSZZ	AC		C	Holer fixing plate
16	PCASZ0002QSZZ	AL		D	TC case
	(Unit)				
901	CHLDZ0010QS52	AU		E	Transcription holder unit

26 TC case unit

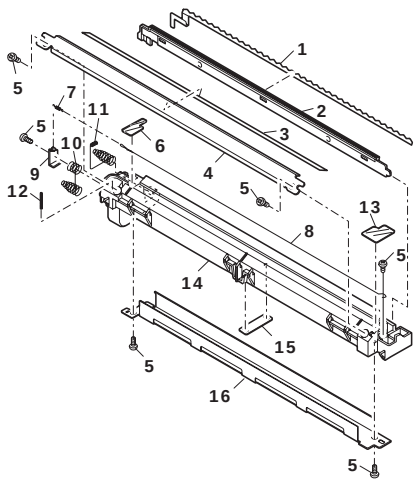

FCP04706

27 250 Sheets tray

NO.	PARTS CODE	PRICE RANK	NEW MARK	PART RANK	DESCRIPTION
1	LPLTM5106FCZZ	AR		C	Turning plate 250
2	PSHEZ4142FCZZ	AC		C	Rotation plate sheet
3	LHLDW1226FCZZ	AB		C	Turn fasner
4	LPLTM2642FCGZ	AD		C	Tray rear plate
5	LPLTP5107FCZZ	AH		C	250 tray side plate F
6	PTME−0255FCZZ	AG		C	250 Tray pawl F
7	XRESP40−06000	AA		C	E-ring
8	PSHEP0061QSZZ	AA		C	Tray guide sheet
9	XEBSE30P08000	AA		C	Screw (3×8)
10	LX−WZ2028SCZZ	AA		C	Washer (ϕ12)
11	NGERH0193FCZZ	AB		C	UC manual feed gear
12	TLABZ3568FCZZ	AB		D	Indication label
13	LPLTP5108FCZZ	AH		C	250 tray side plate R
14	PTME−0256FCZZ	AG		C	250 Tray pawl R
15	MSPRC0108QSZZ	AC		C	250 Tray spring
16	MSPRC1873FCZ1	AB		C	Tray spring
17	MSPRC1145FCZZ	AA		C	Stopper spring
18	LSTPP0161FCZZ	AB		C	Rotation plate stopper
19	GCASP0001QSZ2	AY		D	250 Tray case Except[Europe]
	GCASP0001QSZZ	AY		D	250 Tray case [Europe]
	(Unit)				
901	CCASP0001QS53	BD		E	250 Tray unit Except[Europe]
	CCASP0001QS51	BC		E	250 Tray unit [Europe]

27 250 Sheets tray

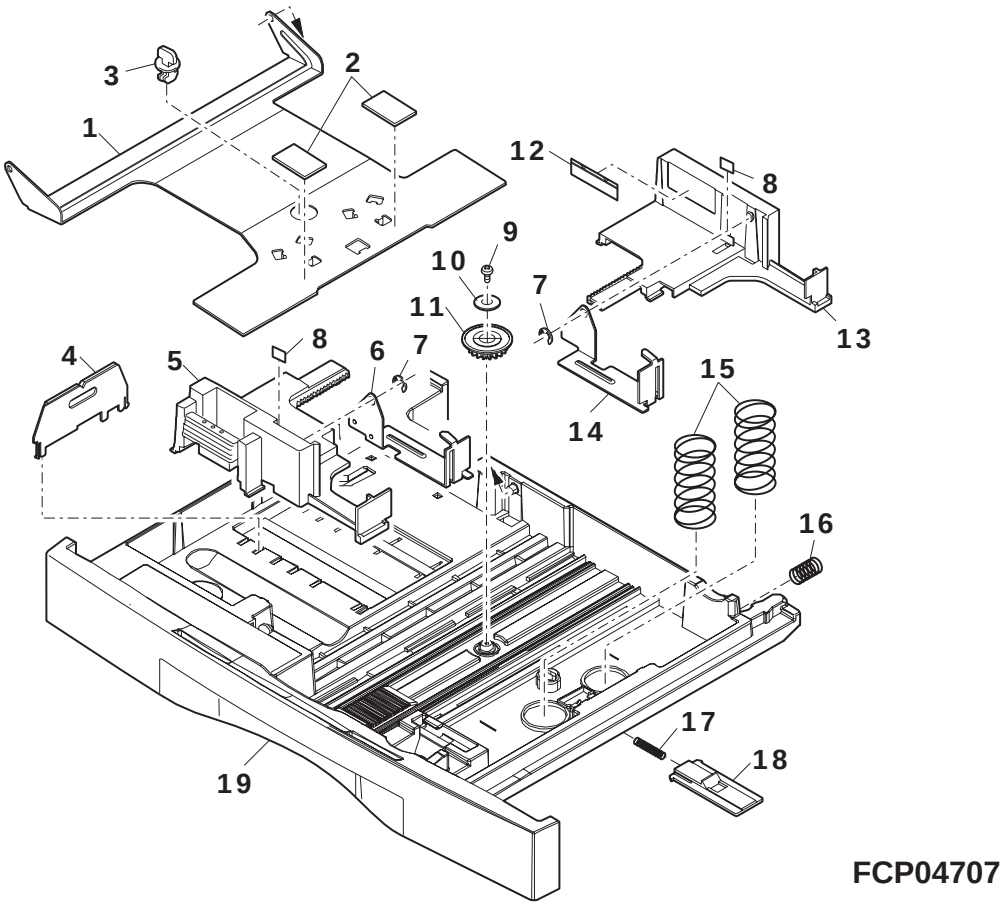

28 DV cartridge unit

NO.	PARTS CODE	PRICE RANK	NEW MARK	PART RANK	DESCRIPTION
1	XBBSE30P08000	AA		C	Screw (3×8)
2	PSEL−0110QSZZ	AF	N	C	DV cover sheet
3	PCŌVP0081QSZZ	AF		D	DV-cover-U
4	UCLEZ0006QS11	AF		D	DV blade
5	NRŌLP0073QSZZ	AS		C	DMX roller
6	PSEL−0083QSZ1	AF		C	DV seal CN
7	PGiDM0090QSZZ	AH		C	TN guide D
8	PSEL−0084QSZ1	AA		C	DV seal RN
9	NGERH0135QSZZ	AD		C	DMX Gear (28T)
10	XRESP40−06000	AA		C	E-ring
11	XEBSF30P08000	AA		C	Screw
12	NGERH0001YSZZ	AD		C	DV idle gear (20T)
13	NBRGC0021QSZZ	AD		C	DID bearing
14	XBPSD30P06KS0	AA		C	Screw
15	NGERH0145QSZZ	AD		C	DV gear (18T)
16	NBRGC0020QSZZ	AH		C	DMX bearing
17	PBŌX−0012QSZZ	AN		D	DV-BOX
18	PSEL−0082QSZZ	AC		C	DV seal FN
19	LPLTM0194QSZZ	AC		C	DV fixing plate
20	PCŌVP0082QSZZ	AD		D	DV-cover-F
21	XEBSD30P06000	AA		C	Screw
22	LX−BZ0656FCZZ	AD		C	Screw
23	MSPRK0001YSZZ	AB		C	Byass spring
24	LHLDR0081QSZZ	AC		C	MG holder
25	XRESP50−06000	AA		C	E-ring
26	RDTCM0013QSZZ	AY		B	ATC sensor
27	XUBUZ30P06000	AA		C	Screw
28	PSEL−0080QSZZ	AE		C	DV seal A
29	PSHEZ0029QS11	AC		C	Side sheet FN
30	PSEL−0096QSZZ	AA	N	C	DV side seal RN
31	NRŌLM0074QSZZ	AZ		C	MG roller
32	PMLT−0008QSZZ	AC		C	DVC cushion
33	LPLTM0003YSZZ	AK		C	DV doctor N
34	XUBUZ30P08000	AA		C	Screw
35	PBRSR0022QSZ1	AF	N	C	Brush
901	DUNT-0221RSZZ				DV-BOX UNIT

28 DV cartridge unit

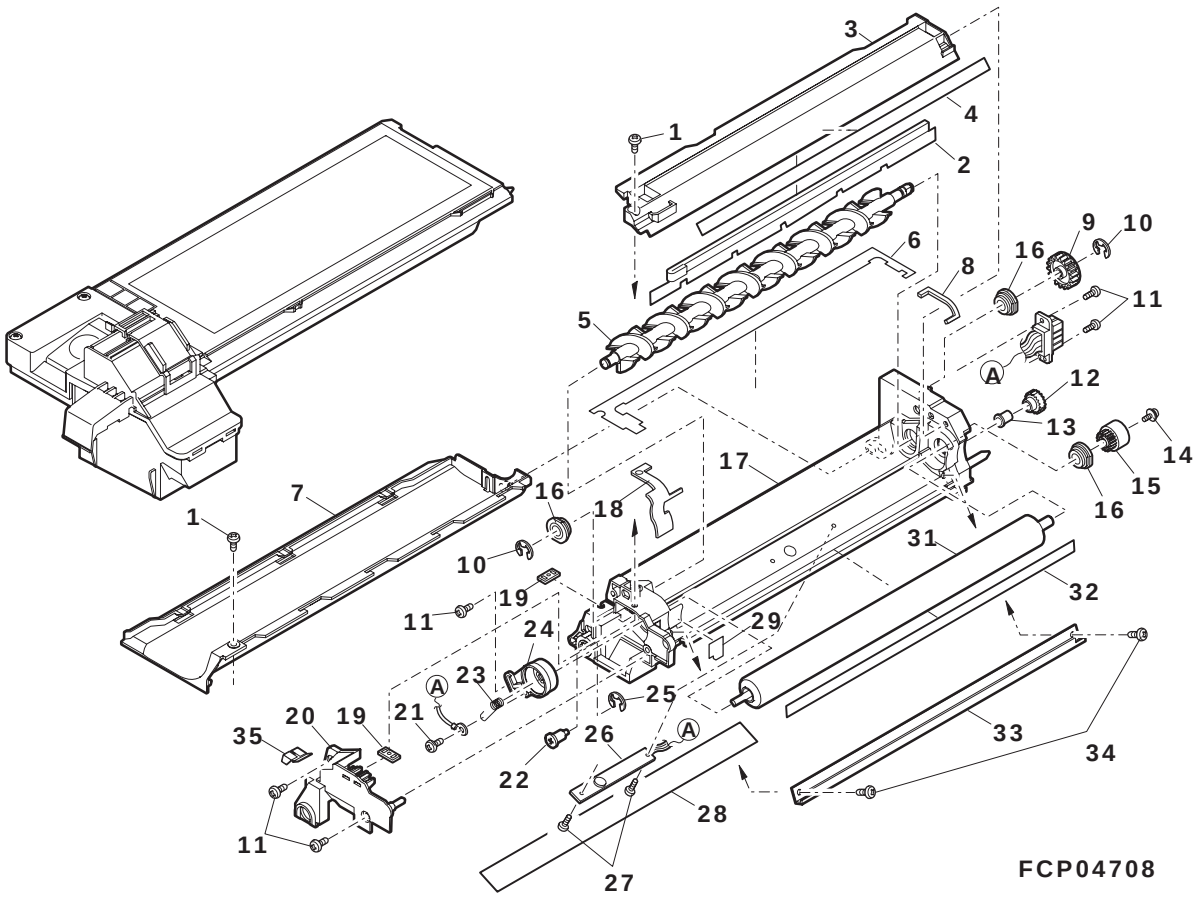

29 Process unit

NO.	PARTS CODE	PRICE RANK	NEW MARK	PART RANK	DESCRIPTION
1	XEBSD30P10000	AA		C	Screw
2	XEBSD26P05000	AA		C	Screw
3	QTANP0004QSZZ	AD		C	Saw terminal
4	PCASZ0004QSZZ	AK		C	MC case
5	LHLDZ0016QSZZ	AM		C	MC holder
6	QTANP0005QSZZ	AC		C	Grid terminal
7	PTPE−0003QSZ1	AF		C	Saw tape
8	LPLTM0033QSZZ	AF		C	Saw
9	LPLTM0034QSZ1	AE	N	C	Grid
10	UCLEZ0007QSZZ	AU		C	Cleaning blade
12	NCPL−0003QSZZ	AC		C	Screw cupring
13	LX−WZ0329FCZZ	AB		C	Washer
14	NBRGP0299FCZZ	AC		C	DV bearing
15	NSFTZ0004QSZZ	AK		C	Screw
16	PSEL−0022QSZ1	AF		C	Seal R
17	PMLT−0015QSZZ	AA		C	Toner shield cushion
18	PMLT−0016QSZZ	AD		C	CL blade cushion
19	PSEL−0021QSZ1	AF		C	Seal F
20	PMLT−0017QSZZ	AC		C	Flange cushion
21	PMLT−0018QSZ1	AC		C	Transport screw cushion
23	PCŌVP0018QSZZ	AG		C	Drum cover
24	LPLTP0010QSZZ	AD		C	Drum holding plate
25	NGERH0039QSZZ	AE		C	Transport pipe gear
26	NGERH0038QSZZ	AC		C	Transport pipe gear
27	NGERH0037QSZZ	AC		C	Idle gear
28	NGERH0036QSZZ	AC		C	Transport screw gear
29	PSHT−0004QSZ1	AC		C	Toner pipp shuter
30	MSPRC0045QSZZ	AA		C	Toner pipe spring
31	PPiPP0004QSZZ	AH		C	Toner pipe
32	PSPAZ0696FCZZ	AC		C	P cap spacer
33	NSFTZ0003QSZZ	AD		C	Transport pipe screw
34	PCAPH0008QSZZ	AC		C	Toner pipe cap
	(Unit)				
901	CDRM−0002QS7A	BH		E	Process frame unit

29 Process unit

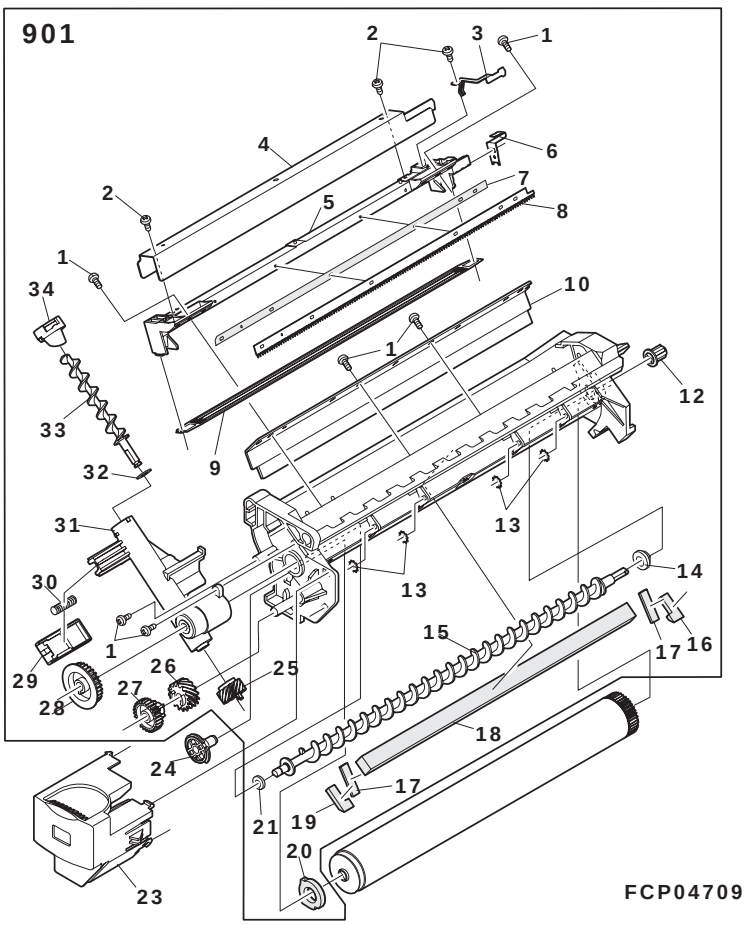

30 Harness

NO.	PARTS CODE	PRICE RANK	NEW MARK	PART RANK	DESCRIPTION
1	DHAi-0041QSZZ	AF		C	CL lead harness
2	DHAi-0042QSZZ	AK		C	ICU-CCD harness
3	DHAi-0039QSZZ	BD		C	Center frame harness (100V series)(AR-121E/AR-151E)
	DHAi-0064QSZ2	AV		C	Center frame harness (200V series)(AR-121E/AR-151E)
	DHAi-0163QSZZ	AS		C	Center frame harness (AR-151/AR-156/AR-F152)
4	DHAi-0040QSZZ	AK		C	OP harness (Except AR-156)
	DHAi-0168QSZZ	AK		C	OP harness (AR-156)
5	DHAi-0045QSZZ	AD		C	Main motor harness
6	PSHEZ0141QSZZ	AC		C	Core holding mylar
7	DHAi-0037QSZ1	AS		C	PPD2 interface harness
8	DHAi-0029QSZZ	AN		C	HL harness 1 (100V Series)
	DHAi-0057QSZZ	AN		C	HL harness 1 (200V Series)
9	DHAi-0181QSZZ	AV		C	DVS harness CRSM2
10	DHAi-0030QSZ1	AN		C	HL harness 2 (100V Series)
	DHAi-0058QSZ1	AL		C	HL harness 2 (200V Series)

30 Harness

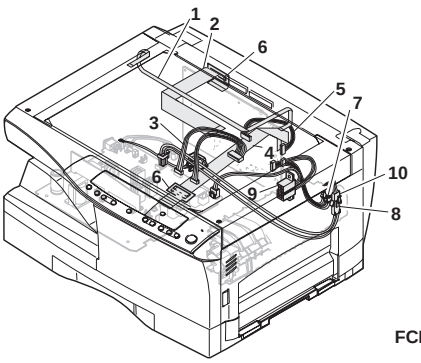

31 Packing material & accessories

NO.	PARTS CODE	PRICE RANK	NEW MARK	PART RANK	DESCRIPTION
1	SPAKA0063QSZZ	AQ		D	Top packing L (AR-156/AR-F152)[Europe]
	SPAKA0192QSZZ	AR		D	Top packing L (AR-156)Except[Europe]
	SPAKA0208QSZZ	AN		D	Top packing L (AR-151)
	SPAKA0049QSZZ	AP		D	Top packing L (AR-121E/AR-151E)
2	SPAKA0186QSZZ	AR		D	Top packing R (AR-F152)
	SPAKA0191QSZZ	AN		D	Top packing R (AR-156)
	SPAKA0209QSZZ	AQ		D	Top packing R (AR-151)
	SPAKA0048QSZZ	AP		D	Top packing R (AR-121E/AR-151E)
⚠ 3	QACCB7521QCZZ	AS		B	AC cable [South Africa,India,Israel]
⚠	QACCB7620QCN1	AX		B	AC cable [Soudi Arabia,Yemen,Bahrain,Kuwait,UAE,Oman,Qutar]
⚠	QACCB7622QCN1	AZ		B	AC cable [SRH(Hong Kong)]
⚠	QACCD7618QCZZ	AQ		B	AC cable [Brazil]
⚠	QACCE7621QCZZ	*	N	B	AC cable [Switzrland]
⚠	QACCE7640QCZZ	*	N	B	AC cable [U.Kingdom]
⚠	QACCF7620QCZZ	AX		B	AC cable [SRS,SRSSC,Indonesia]
⚠	QACCJ9610QCZZ	AR		B	AC cable [Philippines]
⚠	QACCL7621QCZZ	AX		B	AC cable [Australia,New Zealand]
⚠	QACCR7621QCZZ	AZ		B	AC cable [LAG4]
⚠	QACCV6621QCN1	AU		B	AC cable [Other countries]
4	UBNDA0001FCZZ	AA		C	AC cable band
5	SSAKA5003CCZZ	AA		D	Vinyl bag (140×260mm) [Except LAG4]
	SSAKA3001CCZZ	AA		D	Vinyl bag (140×360mm) [LAG4]
6	SSAKZ0002QSZZ	AF		D	Body vinyl bag
7	TiNSD0517TSZZ	*	N	D	Operation manual(Fax) (AR-F152)[Sweden]
	TiNSE0478TSZZ	*	N	D	Operation manual(Fax) (AR-F152)[U.Kingdom,Sweden]
	TiNSF0513TSZZ	*	N	D	Operation manual(Fax) (AR-F152)[France,Holland]
	TiNSG0512TSZZ	*	N	D	Operation manual(Fax) (AR-F152)[Germany,Switzrland]
	TiNSH0516TSZZ	*	N	D	Operation manual(Fax) (AR-F152)[Holland]
	TiNSi0515TSZZ	*	N	D	Operation manual(Fax) (AR-F152)[Italy]
	TiNSZ0476TSZZ	*	N	D	Operation manual (ALL MODEL)[EU]
	TiNSZ0601TSZZ	*	N	D	Operation manual (ALL MODEL)[NON EU]
	TiNSE0520QSZZ	BB	N	D	Operation manual (AR-121E/AR-151E)[English]
	TiNSE0459QSZZ	AP		D	Operation manual (AR-151)[English](Australia,New Zealand)
	TiNSE0529QSZZ	BE	N	D	Operation manual (AR-151)[English](SRH(Hong Kong))
	TiNSE0526QSZZ	BD	N	D	Operation manual (AR-151)English(Other countries)
	TiNSS0525TSZZ	*	N	D	Operation manual (AR-151)[Spanish](LAG4)
	TiNSE0462QSZZ	AP		D	Operation manual (AR-156)[English](Australia,New Zealand)
8	SSAKA2440QCZZ	AB		D	Vinyl bag (280X410 40U) (LAG4)
	SSAKA2347QCZZ	AB		D	Vinyl bag (240×300mm) Except(LAG4)
9	SPAKA0047QSZZ	AX		D	Bottom packing (AR-121E/AR-151E)
	SPAKA0106QSZZ	AY		D	Bottom packing (AR-151/AR-156/AR-F152)
10	SPAKC0052TS75	*	N	D	Packing case (AR-121E)[Europe]
	SPAKC0052QS78	AY	N	D	Packing case (AR-121E)Except[Europe]

31 Packing material & accessories

NO.	PARTS CODE	PRICE RANK	NEW MARK	PART RANK	DESCRIPTION
10	SPAKC0052TS76	*	N	D	Packing case (AR-151E)[Europe]
	SPAKC0211TS12	*	N	D	Packing case (AR-151)[Europe]
	SPAKC0210QS14	AY		D	Packing case (AR-151)Except[Europe]
	SPAKC0213TS12	*	N	D	Packing case (AR-156)[Europe]
	SPAKC0212QS16	AZ		D	Packing case (AR-156)Except[Europe]
	SPAKC0195TS12	*	N	D	Packing case (AR-F152)
11	SPAKA0050QSZZ	AE		D	Fixer packing
12	LHLDW1226FCZZ	AB		C	Turn fasner
13	TTAG-0002QSZZ	AB		D	Tray rotation tag
14	SPAKA0064QSZ1	AC		D	OC packing (AR-F152)
	SPAKA0163QSZZ	AC		D	OC packing (AR-156)
	SPAKA0051QSZZ	AC		D	OC packing (AR-121E/AR-151E/AR-151)
15	TTAG-0003QSZZ	AC		D	Mirror fixing tag
16	LX-BZ0001QSZZ	AD		C	2nd,3rd mirror unit fixing screw
17	CLEVP0016QS01	AL		C	Pressure block lever
18	SPAKA0068QSZZ	AD		D	Front exterior sub packing
19	SPAKA0188QSZZ	AF		D	Middle tray packing F (AR-156)
20	SPAKA0189QSZZ	AF		D	Middle tray packing R (AR-156)
21	SPAKA5116FCZZ	AB		D	SPF protect sheet (AR-F152/AR-156)
25	QCNW-0003TSZZ	*	N	C	Line cable (AR-F152)[Italy]
	QCNW-7252HSZZ	*	N	C	Line cable (AR-F152)[Germany]
	QCNW-7253HSZZ	*	N	C	Line cable (AR-F152)[France]
	QCNW-7254HSZZ	*	N	C	Line cable (AR-F152)[U.Kingdom,Spain,Holland,Sweden,Switzrland]
26	TCAUS0009QSZZ	AF		D	LAG4 plug caution label (LAG4)
101	TLABH0152QSZZ	AD		D	One touch key label (AR-F152)[U.Kingdom,Spain,Itary,Holland,Sweden]
	TLABH0153QSZZ	AD		D	One touch key label (AR-F152)[Germany,Switzrland]
	TLABH0154QSZZ	AD		D	One touch key label (AR-F152)[France]
102	TCADZ0049QSZZ	AH		D	Card [Europe](Except U.Kingdom)
	TCADZ2001QCZA	AE		D	Card [Australia,New Zealand]
103	TLABZ0106QSZZ	AF		C	LAG4 label (LAG4)

31 Packing material & accessories

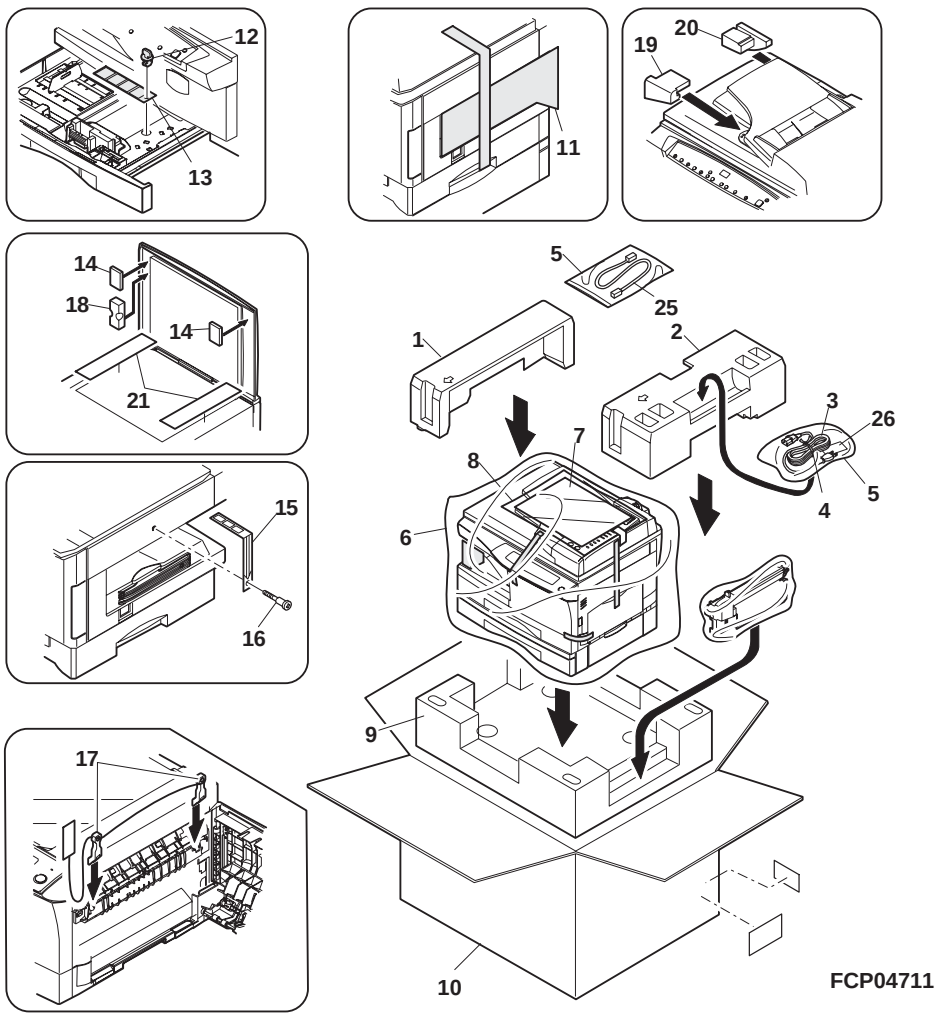

32 Fax PWB(AR-F152)

NO.	PARTS CODE	PRICE RANK	NEW MARK	PART RANK	DESCRIPTION	
1	PSHEZ0190QSZZ	AD		C	Mylar	
2	QCNCM7022SC1J	AE		C	Connector (10pin)	[CN501]
3	QCNCW0034QSZZ	AL		C	Connector (60pin)	[CN601]
4	QJAKT0002QSZZ	AG	N	C	Connector (TM5RJ2-64)	[CN1026]
5	QSŌCZ0051FCZZ	AD		C	IC (DICF-42C-E)	[IC502]
6	QSW-S0012QSZZ	AP	N	B	DIP SW (0-161390-1)	[SW1001]
7	RC-DZ1080RC0L	AR		C	Capacitor (EECS5R5H105)	[C515]
8	RCiLZ0007QSZZ	AF		C	Choke coil (CR54-101)	[L521]
9	RCiLZ1032CCZZ	AD		C	Coil (SBO-02SAN)	[L505,L526,L523,L522,L511,L515,L503,L525]
	RCiLZ1032CCZZ	AD		C	Coil (SBO-02SAN)	[L504,L512,L501,L516,L524,L513,L514]
10	RCiLZ1063YCZZ	AC		C	Inductor (ACB1608M-60)	[L608]
11	RCiLZ7009XCZZ	AC		C	Bead Core (ACB2012m-300-t)	[L601,L604,L603,L609,L605]
12	RCiLZ7020XCZZ	AE		C	Coil (EL0909RR-102K-2)	[L1031]
13	RC-KZ1053RC1E	AC		C	Capacitor (25WV 1μF)	[C656]
14	RCRSP6676RCZZ	AG		B	Crystal (32.768KHz)	[Y501,Y502]
15	RCRSZ0013QSZZ	AP		B	Crystal (49.152MHz)	[Y503]
16	RFiLZ0002QSZZ	AG		C	Line filter (PLF1290-102)	[L1068,L1069]
17	RFiLZ0005QSZZ	AC		C	Line filter (ZJS5101-470TA)	[L502]
18	RMPTW4103QCJJ	AB		B	Resistor (RMPTW410)	[BR550,BR549]
19	RMPTW4220QCJJ	AB		B	Resistor (22Ω ×4)	[BR545,BR535,BR534,BR533,BR546,BR547,BR501]
	RMPTW4220QCJJ	AB		B	Resistor (22Ω ×4)	[BR502,BR520,BR521,BR522,BR523,BR524,BR525]
	RMPTW4220QCJJ	AB		B	Resistor (22Ω ×4)	[BR510,BR507,BR554,BR553,BR552,BR551,BR548]
	RMPTW4220QCJJ	AB		B	Resistor (22Ω ×4)	[BR538,BR536,BR537,BR540,BR539,BR543,BR541]
	RMPTW4220QCJJ	AB		B	Resistor (22Ω ×4)	[BR513,BR514,BR528,BR527,BR529,BR530,BR531,BR532]
20	RMPTW4223QCJJ	AB		B	Resistor (22KΩ×4)	[BR509,BR508,BR542,BR544]
21	RMPTW4390QCJJ	AA		B	Resistor (39Ω×4)	[BR506,BR505,BR504,BR503,BR511,BR512,BR557]
	RMPTW4390QCJJ	AA		B	Resistor (39Ω×4)	[BR556,BR555,BR561,BR560,BR559,BR558,BR515]
	RMPTW4390QCJJ	AA		B	Resistor (39Ω×4)	[BR516,BR526,BR517,BR518,BR519]
22	RRLYZ3411SCZZ	AR		B	Relay (G6GN-2D-SH)	[K1001]
23	RTRNZ7014XCZZ	AR		B	Transformer (970219)	[T1001]
24	TLABZ3405FCZZ	AB		D	ROM label	
25	UBATL2034SCZZ	AH		B	Battery (CR2354)	[BT501]
26	VCCCCY1EH102J	AB		C	Capacitor (1608Type/1000pF/CH)	[C623]
27	VCCCCY1HH101J	AA		C	Capacitor (1608Type/100pF/CH)	[C626,C635]
28	VCCCCY1HH180J	AA		C	Capacitor (50WV 18pF)	[C620,C670]
29	VCCCCY1HH201J	AA		C	Capacitor (50WV 200pF)	[C655,C650,C639,hand solder under IC509]
30	VCCCCY1HH220J	AA		C	Capacitor (50WV 22pF)	[C614,C613]
31	VCCCTQ1HH332J	AC		C	Capacitor (50WV 3300pF)	[C624]
32	VCCCTV1HH330J	AA		C	Capacitor (50WV 33pF)	[C576]
33	VCCCTQ1HH330J	AC	N	C	Capacitor (50WV 33pF)	[C1050]
34	VCE9GA1EW106M	AC	N	C	Capacitor (25WV 10μF)	[C1037]
35	VCE9GA1JW336M	AD	N	C	Capacitor (63WV 33μF)	[C1005]
36	VCE9GA1VW475M	AC	N	C	Capacitor (35WV 4.7μF)	[C1035]
37	VCEAEA1CW107M	AC		C	Capacitor (16WV 100μF)	[C516,C564,C560]
38	VCEAEA1HW335M	AA		C	Capacitor (50WV 3.3μF)	[C1004]
39	VCEAGA0JW107M	AC		C	Capacitor (6.3WV 100μF)	[C569,C562,C559,C546,C557,C561,C563]
40	VCEAGA1AW226M	AB		C	Capacitor (10WV 22μF)	[C540,C541,C572,C573,C565,C529,C528]
	VCEAGA1AW226M	AB		C	Capacitor (10WV 22μF)	[C506,C509,C568,C531,C554]
41	VCEAGA1CW106M	AA		C	Capacitor (16WV 10μF)	[C567,C513,C510,C519]
42	VCEAGA1CW226M	AB		C	Capacitor (16WV 22μF)	[C558,C1040]
43	VCEAGA1CW476M	AB		C	Capacitor (16WV 47μF)	[C566]
44	VCFYJU2EA224K	AD		C	Capacitor (250WV 0.22μF)	[C1006]
45	VCFYJU2EA334K	AD		C	Capacitor (250WV 0.33μF)	[C555]
46	VCFYJU2EA474K	AD		C	Capacitor (250WV 0.47μF)	[C1003]
47	VCFYJU2EA824K	AE		C	Capacitor (250WV 0.82μF)	[C571]
48	VCKYCY1CB333K	AB		C	Capacitor (16WV 0.033μF)	[C538]
49	VCKYCY1EF104Z	AA		C	Capacitor (1608Type/0.1μF/F)	[C503,C556,C521,C511,C552,C532,C533,C534]
	VCKYCY1EF104Z	AA		C	Capacitor (1608Type/0.1μF/F)	[C570,C535,C536,C537,C550,C547,C548]
	VCKYCY1EF104Z	AA		C	Capacitor (1608Type/0.1μF/F)	[C549,C551,C545,C520,C543,C544,C553]
	VCKYCY1EF104Z	AA		C	Capacitor (1608Type/0.1μF/F)	[C512,C514,C523,C524,C502,C501,C504]
50	VCKYCY1EF104Z	AA		C	Capacitor (1608Type/0.1μF/F)	[C542,C527,C507,C508,C601,C628,C630,C652]
	VCKYCY1EF104Z	AA		C	Capacitor (1608Type/0.1μF/F)	[C654,C653,C660,C617,C631,C632,C633,C642]
	VCKYCY1EF104Z	AA		C	Capacitor (1608Type/0.1μF/F)	[C643,C644,C645,C664,C641,C658,C637,C638]
	VCKYCY1EF104Z	AA		C	Capacitor (1608Type/0.1μF/F)	[C636,C612,C608,C616,C609,C610,C634,C618]
	VCKYCY1EF104Z	AA		C	Capacitor (1608Type/0.1μF/F)	[C649,C651,C625,C602,C646,C647,C640,C648]
	VCKYCY1EF104Z	AA		C	Capacitor (1608Type/0.1μF/F)	[C657,C659,C615,C619,C667,C1039,1041]
51	VCKYCY1HB103K	AA		C	Capacitor (1608Type/0.01μF/B)	[C662,C611,C663]
52	VCKYCY1HB331K	AA		C	Capacitor (50WV 330pF)	[C539]
53	VCKYCY1HB391K	AB		C	Capacitor (50WV 390pF)	[C665,C666]
54	VCKYCY1HF473Z	AA		C	Capacitor (50WV 0.047μF)	[C629,C627,C661]
55	VCQYNA1HM102K	AA		C	Capacitor (50WV 1000pF)	[C1036]
56	VCQYNA1HM333K	AA		C	Capacitor (50WV 0.033μF)	[C1010]
57	VCQYNA1HM822K	AA		C	Capacitor (50WV 8200PF)	[C1002,C1031]
58	VCQYNA1HM822K	AA		C	Capacitor (50WV 8200PF)	[C575]
59	VCQYNU1HM332J	AC		C	Capacitor (50WV 3300pF)	[C530]
60	VCQYNU1HM683J	AC		C	Capacitor (50WV 0.068μF)	[C522]
61	VHD10E1////-1	AA		B	Diode (10E1)	[D503]
62	VHD1SS355//-1	AB		B	Diode (1SS355)	[D605,D606,D604,D603]
63	VHDDAN202U/-1	AB		B	Diode (DAN202U)	[DA604,DA603]
64	VHDDAP202U/-1	AB		B	Diode (DAP202U)	[DA601,DA602]

32 Fax PWB(AR-F152)

NO.	PARTS CODE	PRICE RANK	NEW MARK	PART RANK	DESCRIPTION	
65	VHDDSS133//-1	AA		B	Diode (1SS133)	[D1029,D1005]
66	VHDEK14////-1	AE		B	Diode (EK14)	[D502,D501,D505]
67	VHDRB501V40-1	AD		B	Diode (RB501V-40)	[D607]
68	VHDS1NB60//-1	AD		B	Diode (S1NB60)	[B1001]
69	VHEHZ3B1///-1	AB		B	Diode (HZ3B1)	[ZD1033,ZD1034]
70	VHERD27EB//-1	AB		B	Diode (RD27EB)	[ZD1007]
71	VHERD4.3EL3-1	AB		B	Diode (RD4.3EL3)	[ZD505,ZD506]
72	VHERD5.1EB2-1	AA		B	Diode (RD5.1EB2)	[ZD1040]
73	VHi27C08014QS	BD		B	IC (27C08014)	[IC502]
74	VHi1816-6//-1	AZ		B	IC (1816-6)	[IC515,IC510]
75	VHi74VHC11///	AF		B	IC (74VHC11)	[IC601]
76	VHiBU4051BCF/	AF		B	IC (BU4051BCF)	[IC608]
77	VHiBU4053BCF1	AE		B	IC (BU4053BCF1)	[IC605,IC516,IC1004]
78	VHiCG46533175	BA		B	IC (CG46533175)	[IC509]
79	VHiCGS410//-1	AU		B	IC (CGS410)	[IC508]
80	VHiHY18164CSJ	AZ		B	IC (HY18164CSJ)	[IC504]
81	VHiLC8213K/-1	AZ		B	IC (LC8213K)	[IC505]
82	VHiLM311//-1F	AD		B	IC (LM311)	[IC607]
83	VHiLM386M//-1	AE		B	IC (LM386M)	[IC609]
84	VHiLZ9FH19///	AV		B	IC (LZ9FH19)	[IC506]
85	VHiMC34063P-1	AN		B	IC (MC34063P)	[IC513]
86	VHiNJM084M/-F	AH		B	IC (NJM084M)	[IC606]
87	VHiNJM4558MF1	AE		B	IC (NJM4558MF1)	[IC1003]
88	VHiNJU6355E-1	AM		B	IC (NJU6355E)	[IC602]
89	VHiNS32FX164/	BG		B	IC (NS32FX164)	[IC507]
90	VHiNSFX200-25	BG		B	IC (NSFX200-25)	[IC503]
91	VHiTHS56F//-1	AS		B	IC (THS56F)	[IC1001]
92	VHiTL431CLP-2	AG		B	IC (TL431CLP-2)	[IC514]
93	VHiULN2003ANS	AE		B	IC (ULN2003ANS)	[IC603]
94	VHiW166G/////	AT		B	IC (W166G)	[IC604]
95	VHiW24257A12J	AN		B	IC (W24257A12J)	[IC512]
96	VHiW2465S70LL	AW		B	IC (W2465S70LL)	[IC501]
97	VHPPC817///-1	AF		B	Photo coupler (PC817)	[ISO502]
98	VHPTLP627//-1	AH		B	Photo coupler (TLP627)	[ISO501]
99	VHVRA501PV6-1	AE		B	Arrestor (RA501PV6)	[V1002,V1003]
100	VHVTNR5V101K/	AD	N	B	Varistor (TNR5V101K)	[V1004]
101	VRD-HT2EY181J	AA		C	Resistor (1/4W 180Ω ±5%)	[R502]
102	VRS-CY1JD223J	AA		C	Resistor (1/16W 22KΩ ±5%)	[R801]
103	VRD-HT2EY303J	AA		C	Resistor (1/4W 30KΩ ±5%)	[R1002]
104	VRD-HT2EY392J	AA		C	Resistor (1/4W 3.9KΩ ±5%)	[R523]
105	VRD-HT2EY4R7J	AA		C	Resistor (1/4W 4.7Ω ±5%)	[R521]
106	VRD-HT2EY561J	AA		C	Resistor (1/4W 560Ω ±5%)	[R1004]
107	VRD-HT2HY101J	AA		C	Resister (1/2W 100Ω ±5%)	[R501]
108	VRD-HT2HY110J	AA		C	Resistor (1/2W 11Ω ±5%)	[R1001]
109	VRD-HT2HY391J	AA		C	Resistor (1/2W 390ohm +-5%) [R3]	[R1040]
110	VRD-HT2HY561J	AA		C	Resister (1/2W 560Ω ±5%)	[R503]
111	VRS-CY1JD000J	AA		C	Resister (JUMPER/1608Type)	[R732,R728,R670,R730,R621,R633]
112	VRS-CY1JD100J	AA		C	Resistor (1/16W 10Ω ±5%)	[R725,R1018,R1031]
113	VRS-CY1JD101J	AA		C	Resister (1/16W 100Ω ±5%)	[R666,R622,R607]
114	VRS-CY1JD102J	AA		C	Resister (1/16W 1.0KΩ ±5%)	[R647,R664,R703,R673]
115	VRS-CY1JD103J	AA		C	Resister (1/16W 10KΩ ±5%)	[R669,R726,R727,R627,R663,R689,R661,R665]
	VRS-CY1JD103J	AA		C	Resister (1/16W 10KΩ ±5%)	[R605,R717,R718,R688,R704,R705,R514,R695]
	VRS-CY1JD103J	AA		C	Resister (1/16W 10KΩ ±5%)	[R511,R733,R734,R729,R719,R690,R691,R686]
	VRS-CY1JD103J	AA		C	Resister (1/16W 10KΩ ±5%)	[R687,R684,R685,R682,R683,R680,R681,R678]
	VRS-CY1JD103J	AA		C	Resister (1/16W 10KΩ ±5%)	[R679,R676,R677,R693,R700,R699,R675,R698]
	VRS-CY1JD103J	AA		C	Resister (1/16W 10KΩ ±5%)	[R696,R697,R644,R620]
116	VRS-CY1JD103J	AA		C	Resister (1/16W 10KΩ ±5%)	[R629]
117	VRS-CY1JD104J	AA		C	Resister (1/16W 100KΩ ±5%)	[R614]
118	VRS-CY1JD105J	AA		C	Resister (1/16W 1.0MΩ ±5%)	[R619,R800]
119	VRS-CY1JD106J	AA		C	Resister (1/16W 10MΩ ±5%)	[R618]
120	VRS-CY1JD121J	AA		C	Resister (1/16W 120Ω ±5%)	[R723]
121	VRS-CY1JD123J	AA		C	Resister (1/16W 12KΩ ±5%)	[R628,R708]
122	VRSCY1JD1542F	AA		C	Resister (1/16W 15.4KΩ ±1%)	[R709]
123	VRS-CY1JD181J	AA		C	Resister (1/16W 180Ω ±5%)	[R668,R650,R649,R507,R508,R506,R648]
	VRS-CY1JD181J	AA		C	Resister (1/16W 180Ω ±5%)	[R662,R623,R646,R645,R505,R660]
124	VRS-CY1JD182J	AA		C	Resister (1/16W 1.8KΩ ±5%)	[R714]
126	VRSCY1JD2153F	AA		C	Resister (1/16W 215kΩ ±1%)	[R672]
127	VRS-CY1JD221J	AA		C	Resister (1/16W 220Ω ±5%)	[R671,R667,R720]
128	VRS-CY1JD222J	AA		C	Resister (1/16W 2.2KΩ ±5%)	[R604,R712]
129	VRS-CY1JD223J	AA		C	Resister (1/16W 22KΩ ±5%)	[R631,R520,R653,R707,R694]
130	VRSCY1JD2433F	AA		C	Resister (1/16W 243kΩ ±1%)	[R674]
131	VRS-CY1JD330J	AA		C	Resister (1/16W 33Ω ±5%)	[R630,R639,R642,R640,R641]
132	VRS-CY1JD331J	AA		C	Resister (1/16W 330Ω ±5%)	[R711,R706,R638,R643]
133	VRS-CY1JD333J	AA		C	Resister (1/16W 33KΩ ±5%)	[R610]
134	VRSCY1JD3740F	AA		C	Resister (1/16W 374Ω ±1%)	[R519]
135	VRS-CY1JD390J	AA		C	Resister (1/16W 39Ω ±5%)	[R615,R616,R625,R617,R613,R715,R724]
136	VRSCY1JD3921F	AA		C	Resister (1/16W 3.92kΩ ±1%)	[R701]
137	VRSCY1JD4642F	AA		C	Resister (1/16W 46.4KΩ ±1%)	[R637,R636,R702]
138	VRS-CY1JD472J	AA		C	Resister (1/16W 4.7KΩ ±5%)	[R606,R609]
139	VRS-CY1JD473J	AA		C	Resistor (1/16W 47KΩ ±5%)	[R515,R611,R612]

32 Fax PWB(AR-F152)

NO.	PARTS CODE	PRICE RANK	NEW MARK	PART RANK	DESCRIPTION	
140	VRSCY1JD4872F	AA		C	Resister (1/16W 46.7kΩ ±1%)	[R635]
141	VRSCY1JD5112F	AA		C	Resister (1/16W 51.1KΩ ±1%)	[R710,R654]
142	VRS-CY1JD511J	AA		C	Resister (1/16W 510Ω ±5%)	[R716]
143	VRS-CY1JD512J	AA		C	Resister (1/16W 5.1KΩ ±5%)	[R517,R603]
144	VRSCY1JD5622F	AA		C	Resister (1/16W 56.2KΩ ±1%)	[R518,R655]
145	VRS-CY1JD562J	AA		C	Resister (1/16W 5.6KΩ ±5%)	[R516]
146	VRS-CY1JD622J	AA		C	Resistor (0.063W 6.2KΩ ±5%)	[R634]
147	VRS-CY1JD750J	AA		C	Resister (1/16W 75Ω ±5%)	[R721]
148	VRS-CY1JD821J	AA		C	Resister (1/16W 820Ω ±5%)	[R713]
149	VRS-CY1JD822J	AA		C	Resister (1/16W 8.2KΩ ±5%)	[R651]
150	VRS-CY1JD911J	AA		C	Resister (1/16W 910Ω ±5%)	[R652]
151	VRS-HT2HA4R7J	AC		C	Resistor (1/2W 4.7Ω ±5%)	[R509]
152	VRS-RE3AA333J	AK		C	Resistor (1W 33KΩ ±5%)	[R1251]
153	VRS-RE3DA101J	AB		C	Resistor (2W 100Ω ±5%)	[R1003]
154	VRS-TS2AD000J	AA		C	Resister (1/10W 0Ω ±5%)	[L509,L510,L606,L508]
155	VRS-TS2AD332J	AA		C	Resistor (1/10W 3.3KΩ ±5%)	[R1037]
156	VRS-TS2AD473J	AA		C	Resistor (1/10W 47KΩ ±5%)	[R1038]
157	VRS-TS2AD680J	AA		C	Resister (1/10W 68Ω ±5%)	[L607]
158	VS2SC3382-/-1	AD		B	Transistor (2SC3382)	[Q504,Q1002]
159	VS2SC3708-/-1	AD		B	Transistor (2SC3708)	[Q501]
	VS2SC1627Y+-1	AD		B	Transistor (2SC1627Y)	[Q501]
160	VSBUK554/200A	AN		B	FET (BUK554/200A)	[Q1001]
161	VSDTC114EK/-1	AB		B	Transistor (DTC114EK)	[Q1003,Q1004]
162	XBPSD30P08000	AA		C	Screw (3×8)	
163	XNESD30-24000	AA		C	Nut (M3)	
164	XWHSD30-05080	AA		C	Washer	
	(Unit)					
901	CPWBX0042QS51	BY		E	Fax PWB unit	

33 Fax panel PWB(AR-F152)

NO.	PARTS CODE	PRICE RANK	NEW MARK	PART RANK	DESCRIPTION	
1	PSPAF0013QSZZ	AD		C	LCD spacer	
2	QCNCM0811FCZZ	AC		C	Connector (9pin)	[CN701]
3	QSW-P0005QSZZ	AC		B	Tact swtch (B3F-6102)	[S701~747]
4	RCRMZ0002QSZZ	AE		B	Crystal	[Y701]
5	RVR-B1440QCZZ	AF		B	Volume (RK09J11TO)	[VR701]
6	VCCCTV1HH471J	AA		C	Capacitor (50WV 470pF)	[C705~707]
7	VCEAJU1CW226M	AB		C	Capacitor (16WV 22μF)	[C702,703]
8	VCKYTV1EB104K	AA		C	Capacitor (25WV 0.10μF)	[C701,704,711,712,714~718]
9	VHDDAN202U/-1	AB		B	Diode (DAN202U)	[D704,705]
10	VHDDAP202U/-1	AB		B	Diode (DAP202U)	[D706,707]
11	VHiHD4074344/	AX		B	CPU (HD4074344)	[IC701]
12	VHiNJM431U/-1	AF		B	IC (NJM431U)	[IC703]
13	VHP1LHLE-002A	AC		B	LED (1LHLE-002A)	[D701~703]
14	VRS-TP2BD000J	AA		C	Resistor (1/8W 0Ω ±5%)	[J701~746]
15	VRS-TS2AD101J	AA		C	Resistor (1/10W 100Ω ±5%)	[R750]
16	VRS-TS2AD102J	AA		C	Resistor (1/10W 1.0KΩ ±5%)	[R716~729,740~742]
17	VRS-TS2AD103J	AA		C	Resistor (1/10W 10KΩ ±5%)	[R730]
18	VRS-TS2AD105J	AA		C	Resistor (1/10W 1MΩ ±5%)	[R739]
19	VRS-TS2AD202J	AA		C	Resistor (1/10W 2KΩ ±5%)	[R752]
20	VRS-TS2AD203J	AA		C	Resistor (1/10W 20KΩ ±5%)	[R701~715,734~737,748,749]
21	VRS-TS2AD242F	AB		C	Resistor (1/10W 2.4KΩ ±1%)	[R733]
22	VRS-TS2AD272F	AA		C	Resistor (1/10W 2.7KΩ ±1%)	[R732]
23	VRS-TS2AD391J	AA		C	Resistor (1/10W 390Ω ±5%)	[R745~747]
24	VRS-TX2HD511J	AB		C	Resistor (1/2W 510Ω ±5%)	[R731]
25	VSDTA143EK/-1	AB		B	Transistor (DTA143EK)	[Q701]
26	VVLHLM3212-01	BA		E	LCD (HLM3212)	[IC702]
	(Unit)					
901	CPWBF0046QS51	BH		E	Fax panel PWB	

34 Operation PWB

NO.	PARTS CODE	PRICE RANK	NEW MARK	PART RANK	DESCRIPTION	
1	QCNCM0861FCZZ	AB		C	Connector (3pin)	[CN802]
2	QCNCW1132LC1H	AD		C	Connector (18pin)	[CN801]
3	QSW-P0005QSZZ	AC		B	Tact swtch (B3F-6102)	[CLK,PSW,1UPK,10UPK,ZUPK,ZDWK]
	QSW-P0005QSZZ	AC		B	Tact swtch (B3F-6102)	[MAGK,CRSK,EXUPK,EXMODK,EXDWK]
	QSW-P0005QSZZ	AC		B	Tact swtch (B3F-6102)	(AR-156/AR-151)[OLK]
	QSW-P0005QSZZ	AC		B	Tact swtch (B3F-6102)	(AR-156)[DUPK]
	QSW-P0005QSZZ	AC		B	Tact swtch (B3F-6102)	(ARF152/AR-156/AR-151)[BPK]
4	VCCCTV1HH201J	AA		C	Capacitor (50WV 200pF)	[C904,905,906]

34 Operation PWB

NO.	PARTS CODE	PRICE RANK	NEW MARK	PART RANK	DESCRIPTION
5	VCEAJU1CW476M	AB		C	Capacitor (16WV 47μF) [C802]
6	VCKYTV1EB104K	AA		C	Capacitor (25WV 0.10μF) [C907,908]
7	VCKYTV1HB102K	AA		C	Capacitor (50WV 1000pF) [C909~920,922]
8	VCKYTV1HB223K	AA		C	Capacitor (50WV 0.022μF) [C901,903]
9	VHDDSS133//-1	AA		B	Diode (DSS133) [D801~810]
10	VHiLC7935//-1	AN		B	IC (LC7935) [IC901]
11	VHiTC74HC151F	AG		B	IC (TC74H151F) [IC902,903]
12	VHP1LHLE-002A	AC		B	LED(Green) (1LHLE-002A) [CS1L,EXD,EXN,EXL,AE,ZPL,1ENR]
	VHP1LHLE-002A	AC		B	LED(Green) (1LHLE-002A) [2ENR,NOR,1RE,2RE,3RE,ME,PE]
	VHP1LHLE-002A	AC		B	LED(Green) (1LHLE-002A) [RPL,ONLL,PML]
	VHP1LHLE-002A	AC		B	LED(Green) (1LHLE-002A) (AR-156/AR-151)[DATL]
	VHP1LHLE-002A	AC		B	LED(Green) (1LHLE-002A) (AR-156)[DAA1,DAA2,DU21,DU22]
	VHP1LHLE-002A	AC		B	LED(Green) (1LHLE-002A) (AR-156)[SPFL,CS2L,BPL]
13	VHP1LHEE-002A	AC		B	LED (Red) (1LHEE-002A) [TPL,DPL,JPL,MPL]
	VHP1LHEE-002A	AC		B	LED (Red) (1LHEE-002A) (ARF152/AR-156/AR-151)[SJAL]
14	VHPCST338G-25	AP		B	LED (CST338G-25) [LEDM]
15	VRS-TP2BD000J	AA		C	Resistor (1/8W 0Ω ±5%)
16	VRS-TS2AD101J	AA		C	Resistor (1/10W 100Ω ±5%) [R948~960]
17	VRS-TS2AD102J	AA		C	Resistor (1/10W 1.0KΩ ±5%) [R932~935,944~946]
18	VRS-TS2AD103J	AA		C	Resistor (1/10W 10KΩ ±5%) [R962]
19	VRS-TS2AD121J	AA		C	Resistor (1/10W 120Ω ±5%) [R902~918]
20	VRS-TS2AD151J	AA		C	Resistor (1/10W 150Ω ±5%) [R939~941]
21	VRS-TS2AD152J	AA		C	Resistor (1/10W 1.5KΩ ±5%) [R936,937,938]
22	VRS-TS2AD472J	AA		C	Resistor (1/10W 4.7KΩ ±5%) [R919~930,947]
23	VRS-TS2AD511J	AA		C	Resistor (1/10W 510Ω ±5%) [R942,943]
24	VSDTB113ZK//-1	AD		B	Transistor (DTB113ZK) [Q901,902,903]
	(Unit)				
901	CPWBF0014QS59	BQ		E	Operation PWB (AR-F152)
	CPWBF0014QS62	BA		E	Operation PWB (AR-151)
	CPWBF0014QS56	BA		E	Operation PWB (AR-156)
	CPWBF0014QS51	BR		E	Operation PWB (AR-121E/AR-151E)

35 Memory PWB(6MB)[AR-151/AR-156/AR-F152/AR-151E]

NO.	PARTS CODE	PRICE RANK	NEW MARK	PART RANK	DESCRIPTION
1	QCNCM0011QSZZ	AH		C	Connector (40pin) [CN701]
2	VCKYTQ1HF104Z	AA		C	Capacitor (50WV 0.10μF) [C701,702,705]
3	VCKYTV1HB223K	AA		C	Capacitor (50WV 0.022μF) [C703]
4	VHi16163CLT-6	BA		B	DRAM (16163CLT-6) [IC701,702,703]
5	VRS-TS2AD100J	AA		C	Resistor (1/10W 10Ω ±5%) [R701~735]
	(Unit)				
901	CPWBF0013QS52	BL		E	Memory PWB 6MB

36 POD sensor PWB

NO.	PARTS CODE	PRICE RANK	NEW MARK	PART RANK	DESCRIPTION
1	DHAi-0034QSZZ	AQ		C	POD harness
2	LBNDJ0037FCZ1	AA		C	Wire band (T18S)
3	VCKYPU1HB102K	AA		C	Capacitor (50WV 0.001μF)
4	VHPGP1S53V//-1	AE		B	Photo trnasistor (GP1S53V)
	(Unit)				
901	CPWBF1177FC57	AG		E	POD sensor PWB

37 PPD1 sensor PWB

NO.	PARTS CODE	PRICE RANK	NEW MARK	PART RANK	DESCRIPTION
1	DHAi-0035QSZZ	AF		C	PPD1 harness
2	LBNDJ0037FCZ1	AA		C	Wire band (T18S)
3	VCKYPU1HB102K	AA		C	Capacitor (50WV 0.001μF)
4	VHPGP1S53V//-1	AE		B	Photo trnasistor (GP1S53V)
	(Unit)				
901	CPWBF1177FC58	AG		E	PPD1sensor PWB

38 PPD2 sensor PWB

NO.	PARTS CODE	PRICE RANK	NEW MARK	PART RANK	DESCRIPTION
1	DHAi−0036QSZZ	AQ		C	PPD2 harness
2	LBNDJ0037FCZ1	AA		C	Wire band (T18S)
3	VCKYPU1HB102K	AA		C	Capacitor (50WV 0.001μF)
4	VHPGP1S53V/−1	AE		B	Photo trnasistor (GP1S53V)
	(Unit)				
901	CPWBF1177FC59	AG		E	PPD2 sensor PWB

39 MCU PWB(AR-151/AR-156/AR-F152)

NO.	PARTS CODE	PRICE RANK	NEW MARK	PART RANK	DESCRIPTION
1	VHiSLA7027MU/	AQ		B	IC (SLA7027MU) [IC12]
4	QCNCM0923FC10	AE		C	Connector (B10B-PHDSS-B) [CN17]
5	VRNHT2EK1301F	AB		C	Resistor (1/4W 1.3KΩ ±1%) [R3]
6	TLABZ3405FCZZ	AB		D	Version label
7	VHiMX27C4096D	AZ		B	EPROM (MX27C4096DC-10) [for IC6]
8	VHiH8S/2350FP	AY		B	CPU (H8S/2350) [IC9]
9	VHiHG73C025FD	BE		B	IC (HG73C039FD) [IC10]
10	RCRSZ0001QSZZ	AG		B	Crystal (AT-51(19.6608MHz)) [X1]
11	RCRSZ0011QSZZ	AP		B	Crystal (1329(13.9867MHz)) [X2]
12	RCRSZ0003QSZZ	AP		B	Crystal (1330(22.0000MHz)) [X3]
13	QCNCM0923FC14	AE		C	Connector (B14B-PHDSS-B) [CN6]
14	QCNCM0923FC18	AF		C	Connector (B18B-PHDSS-B) [CN23]
15	QCNCM0923FC24	AF		C	Connector (B24B-PHDSS-B) [CN26]
16	QCNCM1005MCZZ	AB		C	Connector (B2P-VH) [CN9]
17	QCNCM1069AC0D	AC		C	Connector (B4P-VH) [CN4]
18	QCNCM1119LC0C	AC		C	Connector (B3B-PH-K-M) [CN10,CN31]
19	QCNCM1119LC0E	AC		C	Connector (B5B-PH-K-M) [CN13]
20	QCNCM2401SC0C	AB		C	Connector (B3B-PH-K-R) [CN14]
21	QCNCM2401SC0E	AC		C	Connector (B5B-PH-K-R) [CN12]
22	QCNCM2401SC0F	AB		C	Connector (B6B-PH-K-R) [CN29]
23	QCNCM7014SC0C	AA		C	Connector (B3B-PH-K-S) [CN7,CN22,CN27]
24	QCNCM7014SC0D	AB		C	Connector (B4B-PH-K-S) [CN11]
25	QCNCM7014SC0E	AB		C	Connector (B5B-PH-K-S) [CN21]
26	QCNCP0340QCZZ	AC		C	Connector (B3B-PH-K-K) [CN1]
27	QCNCW0948FCZ5	AC		C	Connector (B05B-XASK-1) [CN19]
28	QCNCW1124LC0D	AB		C	Connector (04FE-BT-VK-N) [CN25]
29	QCNCW1124LC0H	AC		C	Connector (08FE-BT-VK-N) [CN18]
30	QCNCW1124LC1H	AD		C	Connector (18FE-BT-VK-N) [CN20]
31	QCNCW1124LC3A	AE		C	Connector (31FE-BT-VK-N) [CN15]
32	QCNCW0024QSZZ	AF		C	Connector (FF4-32-S15D5) [CN30]
33	QCNCM0038QSZZ	AH		C	Connector (52340-0402(40pin)) [CN16]
34	QCNCW0015QSZZ	AE		C	Connector (52147-0510(5pin)) [CN28]
35	QCNCW0033QSZZ	AV		C	Connector (TX25-60P-23ST-H1) [CN5]
36	QCNCM0879FCZZ	AF		C	Connector (B28B-PHDSS-B) [CN3]
37	QSŌCZ0002QSZZ	AD		C	IC Socket (CICO-083-S8-T(8pin)) [IC16]
38	QSŌCZ0003QSZZ	AD		C	IC Socket (CICO-406-S8A-T(40pin)) [IC6]
39	VHi61256J12−1	AS		B	SRAM (UT61256JC-12) [IC5,IC7,IC14,IC15]
40	VHi74VHC08/−1	AE		B	IC (74VHC08) [IC111]
41	VHiLM358PS/−S	AC		B	IC (LM358) [IC109]
42	VHiM24C02WBN6	AG		B	IC (M24C02-WBN6) [IC16]
43	VHiM51953BL−1	AF		B	IC (M51953) [IC4]
44	VHiM66236FP−1	AT		B	IC (M66236FP) [IC107]
45	VHiNJM2903M/−	AD		B	IC (NJM2903M) [IC101]
46	VHiNJM3414AM1	AF		B	IC (NJM3414A) [IC110]
48	VHiSN74LS07NS	AF		B	IC (74LS07) [IC106,IC108]
49	VHiTA7291S/−1	AF		B	IC (TA7291S) [IC1]
50	VHiTC74HC14FN	AH		B	IC (74HC14) [IC113]
51	VHiTC74HC151F	AG		B	IC (74HC151) [IC102,IC103,IC104,IC105]
52	VHiTD62503F/−	AG		B	IC (TD62503F) [IC8]
53	VHiTD62003AP1	AG		B	IC (TD62003) [IC2,IC3]
54	VHiTD62064AF/	AM		B	IC (TD62064AF) [IC13,IC11]
55	RMPTW4102QCJJ	AB		B	Block resistor (1.0KΩ×4) [BR20,BR18,BR17,BR51,BR71]
56	RMPTW4203QCJJ	AA		B	Block resistor (20KΩ×4 1/32W ±5%) [BR1~BR13,BR19,BR21,BR22]
	RMPTW4203QCJJ	AA		B	Block resistor (20KΩ×4 1/32W ±5%) [BR27,BR28,BR33,BR35,BR40~BR50]
	RMPTW4203QCJJ	AA		B	Block resistor (20KΩ×4 1/32W ±5%) [BR52,BR53,BR62,BR63,BR68,BR70,BR72,BR73]
57	RMPTW4470QCJJ	AB		B	Block resistor (47Ω×4 1/32W ±5%) [BR23,BR24,BR25,BR26,BR29,BR30,BR36]
	RMPTW4470QCJJ	AB		B	Block resistor (47Ω×4 1/32W ±5%) [BR37,BR38,BR39,BR54,BR57,BR58]
	RMPTW4470QCJJ	AB		B	Block resistor (47Ω×4 1/32W ±5%) [BR59,BR60,BR61,BR65,BR66,BR67]
58	RMPTW4100QCJJ	AA		B	Block resistor (10Ω×4) [BR14,BR15,BR16,BR31,BR32]
	RMPTW4100QCJJ	AA		B	Block resistor (10Ω×4) [BR34,BR55,BR64,BR74,BR75]
59	RMPTW4300QCJJ	AA		B	Block resistor (30Ω×4 1/32W ±5%) [BR56,BR69]
60	VRS−TP2BD121J	AA		C	Resistor (1/8W 120Ω ±5%) [R192]
61	VRS−TP2BD151J	AA		C	Resistor (1/8W 150Ω ±5%) [R150,R169,R269,R275,R294,R295]
62	VRS−TP2BD221J	AB		C	Resistor (1/8W 220Ω ±5%) [R156]
63	VRS−TP2BD241J	AA		C	Resistor (1/8W 240Ω ±5%) [R102,R101]
64	VRS−TP2BD432J	AA		C	Resistor (1/8W 4.3KΩ ±5%) [R136]

39 MCU PWB(AR-151/AR-156/AR-F152)

NO.	PARTS CODE	PRICE RANK	NEW MARK	PART RANK	DESCRIPTION	
65	VRS−TP2BD472J	AA		C	Resistor (1/8W 4.7KΩ±5%)	[R135,R122]
66	VRS−HT3DA102J	AA		C	Resistor (2W 1.0KΩ ±5%)	[R1]
67	VRS−HT3DA1R0J	AB		C	Resistor (2W 1.0Ω ±5%)	[R4,R5]
68	VRS−HT3DAR22J	AA		C	Resistor (2W 0.22Ω ±5%)	[R2]
70	VRS−CY1JD100J	AA		C	Resistor (1/16W 10Ω ±5%)	[R106~R112,R128,R130,R131]
	VRS−CY1JD100J	AA		C	Resistor (1/16W 10Ω ±5%)	[R132,R157~R168,R173,R174,R175]
	VRS−CY1JD100J	AA		C	Resistor (1/16W 10Ω ±5%)	[R176,R184,R185,R199,R204,R205,R210]
	VRS−CY1JD100J	AA		C	Resistor (1/16W 10Ω ±5%)	[R211,R212,R221,R231,R244,R333]
71	VRS−CY1JD101J	AA		C	Resistor (1/16W 100Ω ±5%)	[R216,R248,R276]
72	VRS−CY1JD102F	AA		C	Resistor (1/16W 1KΩ ±1%)	[R151]
73	VRS−CY1JD102J	AA		C	Resistor (1/16W 1.0KΩ ±5%)	[R137,R139,R140,R142,R149,R188]
	VRS−CY1JD102J	AA		C	Resistor (1/16W 1.0KΩ ±5%)	[R196,R197,R224,R229,R240,R247]
	VRS−CY1JD102J	AA		C	Resistor (1/16W 1.0KΩ ±5%)	[R259,R277,R278,R282,R283]
74	VRS−CY1JD103F	AB		C	Resistor (1/16W 10KΩ ±1%)	[R152,R177,R273,R274]
75	VRS−CY1JD103J	AA		C	Resistor (1/16W 10KΩ ±5%)	[R143,R179,R181,R182,R183,R189]
	VRS−CY1JD103J	AA		C	Resistor (1/16W 10KΩ ±5%)	[R219,R228,R232,R257,R258,R270]
	VRS−CY1JD103J	AA		C	Resistor (1/16W 10KΩ ±5%)	[R271,R272,R285,R301,R302]
76	VRS−CY1JD105F	AA		C	Resistor (1/16W 1.0MΩ ±1%)	[R155]
77	VRS−CY1JD122J	AA		C	Resistor (1/16W 1.2KΩ ±5%)	[R170]
78	VRS−CY1JD152J	AA		C	Resistor (1/16W 1.5KΩ ±5%)	[R193,R194,R195,R281]
79	VRS−CY1JD203J	AA		C	Resistor (1/16W 20KΩ ±5%)	[R113,R114,R115,R116,R119,R141,R147]
	VRS−CY1JD203J	AA		C	Resistor (1/16W 20KΩ ±5%)	[R148,R171,R172,R180,R190,R191,R198]
	VRS−CY1JD203J	AA		C	Resistor (1/16W 20KΩ ±5%)	[R200,R201,R208,R209,R213,R214,R220]
	VRS−CY1JD203J	AA		C	Resistor (1/16W 20KΩ ±5%)	[R237,R238,R241,R263,R264,R279]
	VRS−CY1JD203J	AA		C	Resistor (1/16W 20KΩ ±5%)	[R284,R296,R297,R298,R303]
80	VRS−CY1JD205J	AA		C	Resistor (1/16W 2.0MΩ ±5%)	[R266,R265]
81	VRS−CY1JD202J	AA		C	Resistor (1/16W 2.0KΩ ±5%)	[R243]
82	VRS−CY1JD222J	AA		C	Resistor (1/16W 2.2KΩ ±5%)	[R225,R226,R227,R230,R250,R251,R261,R262]
83	VRS−CY1JD242J	AA		C	Resistor (1/16W 2.4KΩ ±5%)	[R267,R268]
84	VRS−CY1JD301J	AA		C	Resistor (1/16W 300Ω ±5%)	[R252,R236,R304,R305]
85	VRS−CY1JD331J	AA		C	Resistor (1/16W 330Ω ±5%)	[R223]
86	VRS−CY1JD332J	AA		C	Resistor (1/16W 3.3KΩ ±5%)	[R203]
87	VRS−CY1JD333J	AA		C	Resistor (1/16W 33KΩ ±5%)	[R125]
88	VRS−CY1JD470J	AA		C	Resistor (1/16W 47Ω ±5%)	[R186,R187,R202,R207,R215,R217,R218]
	VRS−CY1JD470J	AA		C	Resistor (1/16W 47Ω ±5%)	[R222,R233,R234,R242,R245,R246]
	VRS−CY1JD470J	AA		C	Resistor (1/16W 47Ω ±5%)	[R253,R260,R300]
89	VRS−CY1JD472J	AA		C	Resistor (1/16W 4.7KΩ ±5%)	[R104,R153,R239]
90	VRS−CY1JD473J	AA		C	Resistor (1/16W 47KΩ ±5%)	[R103,R126,R133,R134,R254,R255]
91	VRS−CY1JD512J	AA		C	Resistor (1/16W 5.1KΩ ±5%)	[R286]
92	VRS−CY1JD621F	AA		C	Resistor (1/16W 620Ω ±1%)	[R178]
93	VRS−CY1JD621J	AA		C	Resistor (1/16W 620Ω ±5%)	[R235]
94	VRS−CY1JD680J	AA		C	Resistor (1/16W 68Ω ±5%)	[R206]
95	VRS−CY1JD751J	AA		C	Resistor (1/16W 750Ω ±5%)	[R256]
96	VRS−CY1JD752J	AA		C	Resistor (1/16W 7.5KΩ ±5%)	[R123,R124,R145,R146,R154,R249]
97	VRS−CY1JD912J	AA		C	Resistor (1/16W 9.1KΩ ±5%)	[R129]
98	VCCCCY1HH101J	AA		C	Capacitor (50WV 100pF)	[C179,C205,C206,C207,C208,C217,C227]
	VCCCCY1HH101J	AA		C	Capacitor (50WV 100pF)	[C234,C235,C236,C240,C244,C245,C246]
	VCCCCY1HH101J	AA		C	Capacitor (50WV 100pF)	[C247,C256,C275,C276,C277,C278]
	VCCCCY1HH101J	AA		C	Capacitor (50WV 100pF)	[C279,C281,C287,C288,C291,C292,C295]
	VCCCCY1HH101J	AA		C	Capacitor (50WV 100pF)	[C314,C399]
99	VCCCCY1HH120J	AA		C	Capacitor (50WV 12pF)	[C299,C261]
100	VCCCCY1HH180J	AA		C	Capacitor (50WV 18pF)	[C103,C108~C114,C140~C143]
	VCCCCY1HH180J	AA		C	Capacitor (50WV 18pF)	[C189,C190,C191,C192,C218,C219]
	VCCCCY1HH180J	AA		C	Capacitor (50WV 18pF)	[C220,C221,C267,C268,C324,C325,C326]
	VCCCCY1HH180J	AA		C	Capacitor (50WV 18pF)	[C332,C333,C334]
101	VCCCCY1HH330J	AA		C	Capacitor (50WV 33pF)	[C197,C203,C237,C241,C248,C274,C346]
	VCCCCY1HH330J	AA		C	Capacitor (50WV 33pF)	[C347,C348,C349,C367,C368,C369,C370]
102	VCCCCY1HH470J	AA		C	Capacitor (50WV 47PF)	[C102,C171,C172,C178,C198,C199,C200]
	VCCCCY1HH470J	AA		C	Capacitor (50WV 47PF)	[C209,C210,C211,C238,C239,C254]
	VCCCCY1HH470J	AA		C	Capacitor (50WV 47PF)	[C255,C272,C280,C315,C371,C389]
103	VCKYCY1CF104Z	AA		C	Capacitor (16WV 0.1μF)	[C101,C107,C117~C119,C126]
	VCKYCY1CF104Z	AA		C	Capacitor (16WV 0.1μF)	[C127,C130,C133~C137,C146]
	VCKYCY1CF104Z	AA		C	Capacitor (16WV 0.1μF)	[C149,C152,C157,C159~C161,C164]
	VCKYCY1CF104Z	AA		C	Capacitor (16WV 0.1μF)	[C167~C169,C180,C181,C183]
	VCKYCY1CF104Z	AA		C	Capacitor (16WV 0.1μF)	[C184,C195,C204,C213~C216]
	VCKYCY1CF104Z	AA		C	Capacitor (16WV 0.1μF)	[C222~C226,C228~C233,C242]
	VCKYCY1CF104Z	AA		C	Capacitor (16WV 0.1μF)	[C243,C249~C253,C257~C260]
	VCKYCY1CF104Z	AA		C	Capacitor (16WV 0.1μF)	[C263,C264,C266,C270,C271,C273,C282]
	VCKYCY1CF104Z	AA		C	Capacitor (16WV 0.1μF)	[C284~C286,C300,C301,C303,C306]
	VCKYCY1CF104Z	AA		C	Capacitor (16WV 0.1μF)	[C307,C311~C313,C317~C319]
	VCKYCY1CF104Z	AA		C	Capacitor (16WV 0.1μF)	[C323,C329,C330,C335~C339,C345]
	VCKYCY1CF104Z	AA		C	Capacitor (16WV 0.1μF)	[C350~C353,C357,C358,C360,C361]
	VCKYCY1CF104Z	AA		C	Capacitor (16WV 0.1μF)	[C364~C366,C372,C373]
	VCKYCY1CF104Z	AA		C	Capacitor (16WV 0.1μF)	[C375~C379,C381,C386]
	VCKYCY1CF104Z	AA		C	Capacitor (16WV 0.1μF)	[C387,C393~C398,C406~C410]
104	VCKYCY1HB102K	AA		C	Capacitor (50WV 1000pF)	[C120,C121,C129,C138,C139,C145,C147,C148]
	VCKYCY1HB102K	AA		C	Capacitor (50WV 1000pF)	[C150,C151,C153~C156]
	VCKYCY1HB102K	AA		C	Capacitor (50WV 1000pF)	[C162,C165,C173,C176,C182,C185,C186]
	VCKYCY1HB102K	AA		C	Capacitor (50WV 1000pF)	[C187,C193,C201,C202,C212,C265,C269]
	VCKYCY1HB102K	AA		C	Capacitor (50WV 1000pF)	[C283,C289,C290,C296,C304,C305,C308]

39 MCU PWB(AR-151/AR-156/AR-F152)

NO.	PARTS CODE	PRICE RANK	NEW MARK	PART RANK	DESCRIPTION	
104	VCKYCY1HB102K	AA		C	Capacitor (50WV 1000pF)	[C316,C322,C327,C331,C340,C355,C362,C363]
	VCKYCY1HB102K	AA		C	Capacitor (50WV 1000pF)	[C374,C382~C385,C388]
105	VCKYCY1HB222K	AA		C	Capacitor (50WV 2200pF)	[C115,C341,C342,C343]
106	VCKYCY1EB223K	AA		C	Capacitor (25WV 0.022μF)	[C128,C166,C170,C177,C188]
	VCKYCY1EB223K	AA		C	Capacitor (25WV 0.022μF)	[C196,C302,C320,C344,C356]
107	VCKYCY1HB471K	AB		C	Capacitor (50WV 470pF)	[C297,C298]
108	VCKYTW1HB104K	AC		C	Capacitor (50WV 0.1μF)	[C116]
109	VCEAGA1CW106M	AA		C	Capacitor (16WV 10μF)	[C9,C12,C13,C15]
110	VCEAGA1CW107M	AC		C	Capacitor (100μF/16V)	[C8]
111	VCEAGA1CW226M	AB		C	Capacitor (16WV 22μF)	[C6,C11]
112	VCEAGA1CW476M	AB		C	Capacitor (16WV 47μF)	[C2,C5,C17]
113	VCEAGA1EW106M	AA		C	Capacitor (25WV 10μF)	[C19,C18]
114	VCEAGA1EW476M	AA		C	Capacitor (25WV 47uF)	[C3,C14]
115	VCEAGA1HW474M	AB		C	Capacitor (50WV 0.47μF)	[C4]
116	VCEAGA1VW106M	AA		C	Capacitor (35WV 10μF)	[C7]
117	VCEAGA1VW226M	AC		C	Capacitor (35WV 22μF)	[C1]
118	VCEAGA1VW476M	AB		C	Capacitor (35WV 47μF)	[C16]
119	VS2SA1036KQRC	AB		B	Transistor (2SA1036K)	[Q102,Q103]
120	VSDTA143XK/-1	AB		B	Transistor (DTA143XKA)	[Q104]
121	VSDTC114EKA-1	AC		B	Transistor (DTC114EKA)	[Q101]
122	VS2SD1853-/-1	AC		B	Transistor (2SD1853)	[Q1]
123	RCiLZ1032CCZZ	AD		C	Coil (SBO-02SAN)	[L1~L6,L9,L11,L12,L18,L20]
124	RH-DZ0016FCZZ	AB		B	Diode (MA700)	[D16]
125	VHDDAN202U/-1	AB		B	Diode (DAN202U)	[D1,D13,D14,D17,D21,D22,D24]
	VHDDAN202U/-1	AB		B	Diode (DAN202U)	[D26,D29,D31,D33,D35,D38]
126	VHDDAP202U/-1	AB		B	Diode (DAP202U)	[D2,D7,D8,D15,D19,D20]
	VHDDAP202U/-1	AB		B	Diode (DAP202U)	[D27,D28,D30,D32,D36,D37]
127	VHDDA204K//-1	AC		B	Diode (DA204K)	[D102,D105,D106,D107,D109,D110]
128	VHDDSS133//-1	AA		B	Diode (1SS133)	[D3,D4,D5,D6,D9]
	VHDDSS133//-1	AA		B	Diode (1SS133)	[D10,D12,D18,D25,D34]
129	VHD1N4005E/-1	AB		B	Diode (1N4005)	[D11]
130	VHEMTZJ22B/-1	AA		B	Zener diode (MTZJ22B)	[D23]
131	RCiLZ0004QSZZ	AE		C	Coil (NFM839R02C470R101)	[NF2,NF1]
132	RCiLZ0003QSZZ	AC		C	Coil (HF50ACC201209)	[L7,L8,L10,L13,L14,L15]
133	RFiLZ0004QSZZ	AM		C	Filter (ZJSR5101-223)	[L16,L17,L19]
134	VHViCPN38//-1	AF		B	IC protector (ICP-N38)	[CP1,CP2]
135	RRLYD342CQCZZ	AM		B	Relay (RSB-24)	[RY1,RY2]
	(Unit)					
901	CPWBX0038QS3Z	CA		E	MCU PWB unit	

40 MCU PWB(AR-151E/AR121E)

NO.	PARTS CODE	PRICE RANK	NEW MARK	PART RANK	DESCRIPTION	
1	QCNCM0038QSZZ	AH		C	Connector	[CN108]
2	QCNCM0923FC10	AE		C	Connector (10Pin)	[CN112]
3	QCNCM0923FC18	AF		C	Connector (18pin)	[CN119]
4	QCNCM0923FC24	AF		C	Connector (24pin)	[CN101]
5	QCNCM1005MCZZ	AB		C	Connector (2pin)	[CN105]
6	QCNCM1069AC0D	AC		C	Connector (4pin)	[CN103]
7	QCNCM1119LC0E	AC		C	Connector (5pin)	[CN109]
8	QCNCM2401SC0C	AB		C	Connector (3pin)	[CN111]
9	QCNCM2401SC0E	AC		C	Connector (5pin)	[CN110]
10	QCNCM2401SC0F	AB		C	Connector (6pin)	[CN117]
11	QCNCM7014SC0C	AA		C	Connector (3pin)	[CN104,CN118,CN125]
12	QCNCM7014SC0D	AB		C	Connector (4pin)	[CN107]
13	QCNCM7014SC0E	AB		C	Connector (5pin)	[CN120]
14	QCNCP0340QCZZ	AC		C	Connector	[CN102]
15	QCNCW0015QSZZ	AE		C	Connector (5pin)	[CN122]
16	QCNCW0024QSZZ	AF		C	Connector (32pin)	[CN124]
17	QCNCW1124LC0D	AB		C	Connector (4pin)	[CN121]
18	QCNCW1124LC0H	AC		C	Connector (08FE-BT-VK-N)	[CN113]
19	QCNCW1124LC1H	AD		C	Connector (18pin)	[CN116]
20	QCNCW1124LC2F	AD		C	Connector (26FE-BT-VK-N)(26pin)	[CN114]
21	QSŌCZ0002GCZZ	AD		C	IC socket (40pin)	[IC113]
22	QSŌCZ6408ACZZ	AB		C	8P DIP socket	[IC105]
23	RCiLZ0003QSZZ	AC		C	Coil (HF50ACC201209)	[L108,L109,L112,L114,L115,L116]
24	RCiLZ0004QSZZ	AE		C	Coil (NFM839R02C470R101)	[NF100,NF101]
25	RCRSZ0001QSZZ	AG		B	Crystal (19.6608MHz)	[X100]
26	RCRSZ0003QSZZ	AP		B	Crystal (22.000MHz)	[X102]
27	RCRSZ0011QSZZ	AP		B	Crystal (13.9867MHz)	[X101]
28	RFiLZ0004QSZZ	AM		C	Filter (ZJSR5101-223)	[L100,L101,L102,L103,L104,L105,L106]
	RFiLZ0004QSZZ	AM		C	Filter (ZJSR5101-223)	[L107,L110,L111,L113]
29	RH-DZ0016FCZZ	AB		B	Diode (MA700)	[D109]
30	RMPTW4100QCJJ	AA		B	Block resistor (10Ω×4)	[BR114,BR125,BR128,BR130,BR161,BR167,BR171,BR172]
31	RMPTW4102QCJJ	AB		B	Block resistor (1.0KΩ×4)	[BR113,BR124,BR150]
32	RMPTW4203QCJJ	AA		B	Block resistor (20KΩ×4 1/32W ±5%)	[BR100,BR101,BR102,BR103,BR104,BR105]

40 MCU PWB(AR-151E/AR121E)

NO.	PARTS CODE	PRICE RANK	NEW MARK	PART RANK	DESCRIPTION
32	RMPTW4203QCJJ	AA		B	Block resistor (20KΩ×4 1/32W ±5%) [BR106,BR107,BR108,BR109,BR110,BR111,BR112,BR115]
	RMPTW4203QCJJ	AA		B	Block resistor (20KΩ×4 1/32W ±5%) [BR116,BR117,BR122,BR123,BR129,BR131,BR136,BR137]
	RMPTW4203QCJJ	AA		B	Block resistor (20KΩ×4 1/32W ±5%) [BR138,BR139,BR140,BR141,BR142,BR143,BR144]
	RMPTW4203QCJJ	AA		B	Block resistor (20KΩ×4 1/32W ±5%) [BR145,BR146,BR147,BR148,BR149,BR151]
	RMPTW4203QCJJ	AA		B	Block resistor (20KΩ×4 1/32W ±5%) [BR155,BR156,BR162,BR168,BR169,BR170]
33	RMPTW4300QCJJ	AA		B	Block resistor (30Ω×4 1/32W ±5%) [BR160,BR166]
34	RMPTW4470QCJJ	AB		B	Block resistor (47Ω×4 1/32W ±5%) [BR118,BR119,BR120,BR121,BR126,BR127]
	RMPTW4470QCJJ	AB		B	Block resistor (47Ω×4 1/32W ±5%) [BR132,BR133,BR134,BR135,BR152,BR153,BR154]
	RMPTW4470QCJJ	AB		B	Block resistor (47Ω×4 1/32W ±5%) [BR157,BR158,BR159,BR163,BR164,BR165]
35	TLABZ3405FCZZ	AB		D	Version label
36	VCCCCY1HH101J	AA		C	Capacitor (1608Type/100pF/CH) [C229,C242,C275,C276,C277,C278,C283]
	VCCCCY1HH101J	AA		C	Capacitor (1608Type/100pF/CH) [C297,C304,C305,C306,C307,C308,C309]
	VCCCCY1HH101J	AA		C	Capacitor (1608Type/100pF/CH) [C310,C313,C319,C338,C341,C342,C343]
	VCCCCY1HH101J	AA		C	Capacitor (1608Type/100pF/CH) [C344,C345,C355,C356,C357,C360,C361,C385]
37	VCCCCY1HH120J	AA		C	Capacitor (50WV 12pF) [C365,C325]
38	VCCCCY1HH180J	AA		C	Capacitor (50WV 18pF) [C201,C253,C254,C255,C256,C279,C280,C281]
	VCCCCY1HH180J	AA		C	Capacitor (50WV 18pF) [C282,C334,C335,C386,C387,C388,C400,C401,C402]
39	VCCCCY1HH330J	AA		C	Capacitor (50WV 33pF) [C269,C303,C315,C336,C408,C409]
	VCCCCY1HH330J	AA		C	Capacitor (50WV 33pF) [C410,C411,C427,C432,C433,C440]
40	VCCCCY1HH470J	AA		C	Capacitor (50WV 47PF) [C202,C238,C239,C243,C262,C263,C264]
	VCCCCY1HH470J	AA		C	Capacitor (50WV 47PF) [C272,C273,C274,C301,C302,C329,C330]
	VCCCCY1HH470J	AA		C	Capacitor (50WV 47PF) [C340,C347,C384,C431]
41	VCEAGA1CW106M	AA		C	Capacitor (16WV 10μF) [C105,C110,C111,C116]
42	VCEAGA1CW107M	AC		C	Capacitor (100μF/16V) [C103]
43	VCEAGA1CW226M	AB		C	Capacitor (16WV 22μF) [C101,C109]
44	VCEAGA1CW476M	AB		C	Capacitor (16WV 47μF) [C119]
45	VCEAGA1EW106M	AA		C	Capacitor (25WV 10μF) [C120,C118]
46	VCEAGA1EW476M	AA		C	Capacitor (25WV 47uF) [C112]
47	VCEAGA1HW474M	AB		C	Capacitor (50WV 0.47μF) [C100]
48	VCEAGA1VW106M	AA		C	Capacitor (35WV 10μF) [C104]
49	VCEAGA1VW226M	AC		C	Capacitor (35WV 22μF) [C102]
50	VCEAGA1VW476M	AB		C	Capacitor (35WV 47μF) [C117]
51	VCKYCY1CF104Z	AA		C	Capacitor (16WV 0.1μF) [C106,C108,C113,C114,C115,C203,C206]
	VCKYCY1CF104Z	AA		C	Capacitor (16WV 0.1μF) [C212,C213,C216,C224,C230,C244,C248]
	VCKYCY1CF104Z	AA		C	Capacitor (16WV 0.1μF) [C252,C288,C289,C290,C291,C293,C294]
	VCKYCY1CF104Z	AA		C	Capacitor (16WV 0.1μF) [C295,C296,C299,C300,C311,C312,C314]
	VCKYCY1CF104Z	AA		C	Capacitor (16WV 0.1μF) [C316,C317,C318,C320,C321,C322,C323]
	VCKYCY1CF104Z	AA		C	Capacitor (16WV 0.1μF) [C326,C327,C328,C332,C337,C346,C348]
	VCKYCY1CF104Z	AA		C	Capacitor (16WV 0.1μF) [C349,C350,C351,C352,C354,C363,C372]
	VCKYCY1CF104Z	AA		C	Capacitor (16WV 0.1μF) [C380,C389,C394,C397,C398,C399,C412]
	VCKYCY1CF104Z	AA		C	Capacitor (16WV 0.1μF) [C417,C419,C420,C434,C435,C436,C438]
	VCKYCY1CF104Z	AA		C	Capacitor (16WV 0.1μF) [C441,C442,C443,C444,C446,C205,C211]
	VCKYCY1CF104Z	AA		C	Capacitor (16WV 0.1μF) [C218,C227,C221,C233,C251,C265,C287]
	VCKYCY1CF104Z	AA		C	Capacitor (16WV 0.1μF) [C286,C285,C298,C292,C324,C331,C382]
	VCKYCY1CF104Z	AA		C	Capacitor (16WV 0.1μF) [C369,C375,C374,C373,C381,C390,C404]
	VCKYCY1CF104Z	AA		C	Capacitor (16WV 0.1μF) [C407,C406,C405,C426,C425,C430,C445]
	VCKYCY1CF104Z	AA		C	Capacitor (16WV 0.1μF) [C439,C447,C268,C364,C396,C395,C223,C222,C232,C236,C284]
52	VCKYCY1EB223K	AA		C	Capacitor (25WV 0.022μF) [C215,C235,C240,C241,C249,C257,C362,C379,C413,C421]
53	VCKYCY1HB102K	AA		C	Capacitor (50WV 1000pF) [C207,C217,C219,C225,C234,C237,C245]
	VCKYCY1HB102K	AA		C	Capacitor (50WV 1000pF) [C250,C258,C259,C260,C261,C267,C270]
	VCKYCY1HB102K	AA		C	Capacitor (50WV 1000pF) [C271,C333,C339,C353,C358,C359,C368]
	VCKYCY1HB102K	AA		C	Capacitor (50WV 1000pF) [C370,C371,C378,C383,C391,C393,C403]
	VCKYCY1HB102K	AA		C	Capacitor (50WV 1000pF) [C418,C422,C424,C429,C437,C228]
54	VCKYCY1HB222K	AA		C	Capacitor (50WV 2200pF) [C204,C414,C415,C416]
55	VCKYCY1HB471K	AB		C	Capacitor (50WV 470pF) [C366,C367]
56	VCKYTW1HB104K	AC		C	Capacitor (50WV 0.1μF) [C214]
57	VCQYNA1HM104K	AB		C	Capacitor (0.1μF/50V) [C107]
58	VHD1N4005E/-1	AB		B	Diode (1N4005) [D102]
59	VHDDA204K//-1	AC		B	Diode (DA204K) [D200,D201,D202,D203,D204,D205,D206,D207]
60	VHDDAN202U/-1	AB		B	Diode (DAN202U) [D111,D114,D115,D116,D118,D121,D123]
61	VHDDAP202U/-1	AB		B	Diode (DAP202U) [D108,D112,D113,D119,D120,D122]
62	VHDDSS133//-1	AA		B	Diode (1SS133) [D100,D101,D103,D104,D105,D106,D107,D110,D117]
63	VHi74VHC08/-1	AE		B	IC (74VHC08) [IC208]
64	VHiH8S/2350FP	AY		B	CPU (H8S/2350FP) [IC108]
65	VHiHG73C025FD	BE		B	IC (HG73C025FD) [IC109]
66	VHiLM358PS/-S	AC		B	IC (LM358PS) [IC207]
67	VHiM24C02WBN6	AG		B	IC (M24C02WBN6) [IC113]
68	VHiM51953BL-1	AF		B	IC (M51953BL) [IC103]
69	VHiM66236FP-1	AT		B	IC (M66236FP) [IC204]
70	VHiMX27C2048D	AY		B	IC (MX27C2048D) [IC105]
71	VHiNJM2903M/-	AD		B	IC (NJM2903M) [IC200]
72	VHiNJM3414AM1	AF		B	IC [IC206]
73	VHiSLA7027MU/	AQ		B	IC (SLA7027MU) [IC110]
74	VHiSN74LS07NS	AF		B	IC (SN74LS07NS) [IC202,IC205]
75	VHiTA7291S/-1	AF		B	IC (TA7291S) [IC100]
76	VHiTC74HC14FN	AH		B	IC (TC74HC14FN) [IC209]

40 MCU PWB(AR-151E/AR121E)

NO.	PARTS CODE	PRICE RANK	NEW MARK	PART RANK	DESCRIPTION	
77	VHiTC74HC151F	AG		B	IC (TC74H151F)	[IC201,IC203]
78	VHiTD62003AP1	AG		B	IC (TD620003AP1)	[IC101,IC102]
79	VHiTD62503F/-	AG		B	IC (TD62503)	[IC107]
80	VHiW24257A12J	AN		B	IC (W24257A12J)	[IC104,IC106,IC111,IC112]
81	VHViCPN38//-1	AF		B	IC protector (ICPN38)	[CP101]
82	VRNHT2EK1301F	AB		C	Resistor (1/4W 1.3KΩ ±1%)	(AR-151E)[R102]
	VRNHT2EK2401F	AA		C	Resistor (1/4W 2.4KΩ ±1%)	(AR-121E)[R102]
84	VRS-CY1JD100J	AA		C	Resistor (1/16W 10Ω ±5%)	[R241,R266,R267,R274,R285,R299,R333]
85	VRS-CY1JD101J	AA		C	Resistor (1/16W 100Ω ±5%)	[R280,R303,R328]
86	VRS-CY1JD102F	AA		C	Resistor (1/16W 1KΩ ±1%)	[R223]
87	VRS-CY1JD102J	AA		C	Resistor (1/16W 1.0KΩ ±5%)	[R209,R214,R218,R239,R248,R249,R284]
	VRS-CY1JD102J	AA		C	Resistor (1/16W 1.0KΩ ±5%)	[R286,R296,R304,R327,R330,R331]
88	VRS-CY1JD103F	AB		C	Resistor (1/16W 10KΩ ±1%)	[R222,R232,R322,R323]
89	VRS-CY1JD103J	AA		C	Resistor (1/16W 10KΩ ±5%)	[R208,R231,R234,R235,R236,R238,R244,R276]
	VRS-CY1JD103J	AA		C	Resistor (1/16W 10KΩ ±5%)	[R287,R294,R312,R313,R320,R324,R325]
90	VRS-CY1JD105F	AA		C	Resistor (1/16W 1.0MΩ ±1%)	[R219]
91	VRS-CY1JD122J	AA		C	Resistor (1/16W 1.2KΩ ±5%)	[R226]
92	VRS-CY1JD152J	AA		C	Resistor (1/16W 1.5KΩ ±5%)	[R253,R254,R255]
93	VRS-CY1JD202J	AA		C	Resistor (1/16W 2.0KΩ ±5%)	[R300]
94	VRS-CY1JD203J	AA		C	Resistor (1/16W 20KΩ ±5%)	[R215,R228,R229,R233,R237,R242]
	VRS-CY1JD203J	AA		C	Resistor (1/16W 20KΩ ±5%)	[R245,R250,R251,R252,R258,R259,R260,R262]
	VRS-CY1JD203J	AA		C	Resistor (1/16W 20KΩ ±5%)	[R263,R268,R269,R271,R272,R275,R277]
	VRS-CY1JD203J	AA		C	Resistor (1/16W 20KΩ ±5%)	[R283,R288,R289,R295,R301,R317,R329]
95	VRS-CY1JD205J	AA		C	Resistor (1/16W 2.0MΩ ±5%)	[R315,R316]
96	VRS-CY1JD242J	AA		C	Resistor (1/16W 2.4KΩ ±5%)	[R319,R318]
97	VRS-CY1JD301J	AA		C	Resistor (1/16W 300Ω ±5%)	[R246,R247,R290,R307]
98	VRS-CY1JD331J	AA		C	Resistor (1/16W 330Ω ±5%)	[R281]
99	VRS-CY1JD332J	AA		C	Resistor (1/16W 3.3KΩ ±5%)	[R261]
100	VRS-CY1JD333J	AA		C	Resistor (1/16W 33KΩ ±5%)	[R207]
101	VRS-CY1JD470J	AA		C	Resistor (1/16W 47Ω ±5%)	[R240,R243,R257,R264,R270,R273,R278]
	VRS-CY1JD470J	AA		C	Resistor (1/16W 47Ω ±5%)	[R279,R292,R293,R298,R302,R305,R306,R314]
102	VRS-CY1JD472J	AA		C	Resistor (1/16W 4.7KΩ ±5%)	[R205,R221,R297]
103	VRS-CY1JD473J	AA		C	Resistor (1/16W 47KΩ ±5%)	[R204,R206,R212,R213,R310,R311]
104	VRS-CY1JD512J	AA		C	Resistor (1/16W 5.1KΩ ±5%)	[R332]
105	VRS-CY1JD621F	AA		C	Resistor (1/16W 620Ω ±1%)	[R230]
106	VRS-CY1JD621J	AA		C	Resistor (1/16W 620Ω ±5%)	[R291]
107	VRS-CY1JD680J	AA		C	Resistor (1/16W 68Ω ±5%)	[R265]
108	VRS-CY1JD751J	AA		C	Resistor (1/16W 750Ω ±5%)	[R309]
109	VRS-CY1JD752J	AA		C	Resistor (1/16W 7.5KΩ ±5%)	[R203,R220,R308]
110	VRS-CY1JD912J	AA		C	Resistor (1/16W 9.1KΩ ±5%)	[R210]
111	VRS-HT3DA102J	AA		C	Resistor (2W 1.0KΩ ±5%)	[R100]
112	VRS-HT3DA1R0J	AB		C	Resistor (2W 1.0Ω ±5%)	[R103,R104]
113	VRS-HT3DAR22J	AA		C	Resistor (2W 0.22Ω ±5%)	[R101]
114	VRS-TP2BD121J	AA		C	Resistor (1/8W 120Ω ±5%)	[R256]
115	VRS-TP2BD151J	AA		C	Resistor (1/8W 150Ω ±5%)	[R224,R227,R321,R326]
116	VRS-TP2BD221J	AB		C	Resistor (1/8W 220Ω ±5%)	[R225]
117	VRS-TP2BD241J	AA		C	Resistor (1/8W 240Ω ±5%)	[R200,R201]
118	VRS-TP2BD432J	AA		C	Resistor (1/8W 4.3KΩ ±5%)	[R217]
119	VRS-TP2BD472J	AA		C	Resistor (1/8W 4.7KΩ±5%)	[R202,R211]
120	VS2SA1036KQRC	AB		B	Transistor (2SA1036KQRC)	[Q200,Q202]
121	VSDTA143XK/-1	AB		B	Transistor (DTA143XK)	[Q203]
122	VSDTC114EKA-1	AC		B	Transistor (DTC114EKA)	[Q201]
	(Unit)					
901	CPWBX0072QSEJ	BY	N	E	MCU PWB	(AR-151E)
	CPWBX0072QSEi	BY	N	E	MCU PWB	(AR-121E)

■ Index

PARTS CODE	NO.	PRICE RANK	NEW MARK	PART RANK	
【C】					
CBTN-0004QS06	9- 5	AG		E	
CBTN-0009QS01	9- 2	AG		E	
CBTN-0037QS01	7- 8	AK		E	
CBTN-0040QS01	7- 6	AH		E	
CBTN-0041QS01	7- 5	AH		E	
CCAB-0003QS16	1- 1	AQ		D	
CCAB-0027QS01	7- 2	AS		D	
CCASP0001QS51	27-901	BC		E	
CCASP0001QS53	27-901	BD		E	
CCLEZ0005QS51	21- 1	AQ		E	
〃	22- 1	AQ		E	
CCŌVH0004QS51	2-901	BC		E	
CDAiU0002QS01	11- 12	BG		D	
〃	12- 14	BG		D	
CDAiU0008QS51	12- 7	BC		E	
CDAiU0008QS59	12- 7	BP		E	
CDRM-0002QS7A	29-901	BH		E	
CFiX-0003QS02	1- 13	AN		D	
CFiX-0003QS52	1-501	BA		E	
CFiX-0003QS54	1-501	BA		E	
CFiX-0003QS59	1-501	AZ		E	
CFiX-0003QS60	1-501	AZ		E	
CFRM-0006QS51	23-502	BE		E	
CFRM-0007QS51	23-501	BF		E	
CFRM-0010QS51	24-502	BG		E	
CFRM-0011QS55	3- 11	BH		E	
〃	4-901	BH		E	
CGERH0011QS51	20- 9	AE		E	
CHAi-0028QS51	25- 3	AL		C	
CHAi-0032QS51	25- 2	AL		C	
CHLDZ0010QS52	10- 18	AU		E	
〃	26-901	AU		E	
CHLDZ0019QS31	11- 2	BC		E	
〃	14-901	BC		E	
CLEVP0016QS01	31- 17	AL		C	
CPLTM0023QS02	23- 5	AF		C	
CPLTM0023QS03	24- 25	AG		C	
CPLTM0024QS01	17- 24	AG		C	
CPLTM0025QS01	11- 21	AH		C	
CPLTM0028QS01	14- 13	AH		C	
CPLTM0029QS01	14- 9	AH		C	
CPLTM0038QS02	17- 46	AG		C	
CPLTM0042QS02	20- 20	AY		C	
CPLTM0042QS51	20-901	BP		E	
CPLTM0042QS53	20-901	BV		E	
CPLTM0042QS54	20-901	BV		E	
CPNLC0002QS0G	9- 10	AT		D	
CPNLC0002QS0H	9- 10	AT		D	
CPNLC0002QS0J	9- 10	AT		D	
CPNLC0002QS0K	9- 10	AT		D	
CPNLC0002QS0L	9- 10	AT		D	
CPWBF0009QS51	4- 7	AG		E	
CPWBF0009QS52	7- 40	AU		E	
CPWBF0013QS52	18- 10	BL		E	
〃	35-901	BL		E	
CPWBF0014QS51	9- 8	BR		E	
〃	34-901	BR		E	
CPWBF0014QS56	9- 8	BA		E	
〃	34-901	BA		E	
CPWBF0014QS59	9- 8	BQ		E	
〃	34-901	BQ		E	
CPWBF0014QS62	9- 8	BA		E	
〃	34-901	BA		E	
CPWBF0017QS32	18- 13	BU		E	
CPWBF0017QS37	18- 13	BU		E	
CPWBF0039QS32	18- 13	BU		E	
CPWBF0039QS34	18- 13	BV		E	
CPWBF0046QS51	7- 9	BH		E	
〃	33-901	BH		E	
CPWBF1177FC57	15- 4	AG		E	
〃	36-901	AG		E	
CPWBF1177FC58	17- 1	AG		E	
〃	37-901	AG		E	
CPWBF1177FC59	19- 13	AG		E	
〃	38-901	AG		E	
CPWBF1177FC5A	12- 9	AG		E	
CPWBF1177FC5B	23- 1	AG		E	
CPWBX0038QS3Z	18- 4	CA		E	

PARTS CODE	NO.	PRICE RANK	NEW MARK	PART RANK	
CPWBX0038QS3Z	39-901	CA		E	
CPWBX0042QS51	18- 6	BY		E	
〃	32-901	BY		E	
CPWBX0072QSEi	18- 4	BY	N	E	
〃	40-901	BY	N	E	
CPWBX0072QSEJ	18- 4	BY	N	E	
〃	40-901	BY	N	E	
CREFL0003QS33	11- 3	BQ		E	
CRŌLP0015QS01	17- 20	AU		C	
CSLi-0103FC31	14- 7	AF		D	
CSŌU-0002QS52	24-501	AY		E	
CSW-M0004QS51	21- 4	AS		E	
〃	22- 4	AS		E	
CTHM-0019FC52	19- 12	AU		E	
CTME-0229FC03	19- 11	AG		C	
【D】					
DHAi-0029QSZZ	16- 24	AN		C	
〃	18- 12	AN		C	
〃	30- 8	AN		C	
DHAi-0030QSZ1	19- 16	AN		C	
〃	30- 10	AN		C	
DHAi-0034QSZZ	36- 1	AQ		C	
DHAi-0035QSZZ	37- 1	AF		C	
DHAi-0036QSZZ	38- 1	AQ		C	
DHAi-0037QSZ1	16- 23	AS		C	
〃	30- 7	AS		C	
DHAi-0039QSZZ	18- 40	BD		C	
〃	30- 3	BD		C	
DHAi-0040QSZZ	1- 7	AK		C	
〃	15- 10	AK		C	
〃	30- 4	AK		C	
DHAi-0041QSZZ	11- 6	AF		C	
〃	12- 3	AF		C	
〃	30- 1	AF		C	
DHAi-0042QSZZ	12- 5	AK		C	
〃	30- 2	AK		C	
DHAi-0045QSZZ	20- 27	AD		C	
〃	30- 5	AD		C	
DHAi-0046QSZZ	16- 18	AH		C	
DHAi-0047QSZZ	10- 12	AH		C	
DHAi-0048QSZZ	16- 19	AG		C	
DHAi-0050QSZZ	17- 27	AR		C	
DHAi-0055QSZZ	4- 8	AK		C	
DHAi-0057QSZZ	16- 24	AN		C	
〃	18- 12	AN		C	
〃	30- 8	AN		C	
DHAi-0058QSZ1	19- 16	AL		C	
〃	30- 10	AL		C	
DHAi-0064QSZ2	18- 40	AV		C	
〃	30- 3	AV		C	
DHAi-0066QSZZ	23- 2	AD		C	
〃	24- 22	AD		C	
DHAi-0147QSZ2	5- 11	AW		C	
DHAi-0155QSZ1	13- 2	AT		C	
〃	15- 14	AT		C	
DHAi-0159QSZ1	7- 39	AN		C	
DHAi-0160QSZZ	7- 37	AH		C	
DHAi-0161QSZ5	8- 34	BA		C	
DHAi-0162QSZZ	8- 47	AE		C	
DHAi-0163QSZZ	18- 40	AS		C	
〃	30- 3	AS		C	
DHAi-0164QSZZ	17- 56	AE		C	
DHAi-0168QSZZ	1- 7	AK		C	
〃	15- 10	AK		C	
〃	30- 4	AK		C	
DHAi-0169QSZZ	18- 41	AQ		C	
DHAi-0179QSZZ	18- 16	AN		C	
DHAi-0181QSZZ	16- 40	AV		C	
〃	30- 9	AV		C	
DUNT-0084QS13	18-501	AU		E	
DUNTK0013QS11	13- 4	BT		E	
DUNTW0014QS22	19-901	BT		E	
DUNTW0014QS23	19-901	BT		E	
DUNTW0014QS24	19-901	BT		E	
DWiR-0466CSZZ	26- 8	BG		B	
【G】					
GCAB-0005QSZA	1- 10	AN		D	
GCAB-0005QSZZ	1- 10	AN		D	
GCAB-0006QSZA	1- 17	AN		D	
GCAB-0006QSZZ	1- 17	AN		D	
GCAB-0007QSZ1	10- 1	AU		D	

PARTS CODE	NO.	PRICE RANK	NEW MARK	PART RANK	
GCAB-0007QSZZ	10- 1	AU		D	
GCAB-0008QSZZ	4- 1	AM		D	
GCAB-0010QSZ1	1- 17	AL		D	
GCAB-0021QSZZ	1- 18	AY		D	
GCAB-0028QSZZ	1- 18	AY		D	
GCASP0001QSZ2	27- 19	AY		D	
GCASP0001QSZZ	27- 19	AY		D	
GCŌVH0003QSZZ	2- 1	AM		D	
GCŌVH0004QSZZ	2- 2	AX		D	
GDAi-0001QSZZ	17- 28	BF		D	
〃	18- 17	BF		D	
GLEGG0064FCZZ	18- 18	AC		C	
【J】					
JBTN-0005QSZZ	9- 4	AC		C	
JBTN-0008QSZ2	9- 6	AF		C	
JBTN-0010QSZZ	9- 3	AC		C	
JBTN-0036QSZZ	7- 7	AF		C	
JBTN-0038QSZZ	7- 4	AF		C	
JBTN-0039QSZZ	7- 3	AE		C	
JKNBZ0001QSZZ	16- 22	AE		C	
JKNBZ0004QSZZ	5- 35	AD		C	
〃	8- 35	AD		C	
【L】					
LANGT0004QSZZ	6- 8	AC		C	
LANGT0005QSZZ	6- 1	AD		C	
LANGT0006QSZZ	20- 28	AC		C	
LBNDJ0013FCZ1	3- 12	AA		C	
〃	5- 16	AA		C	
〃	6- 6	AA		C	
〃	8- 14	AA		C	
〃	13- 3	AA		C	
〃	18- 32	AA		C	
〃	19- 17	AA		C	
〃	23- 3	AA		C	
〃	24- 21	AA		C	
〃	25- 9	AA		C	
LBNDJ0037FCZ1	36- 2	AA		C	
〃	37- 2	AA		C	
〃	38- 2	AA		C	
LBNDJ0043FCZZ	16- 6	AA		C	
LBNDJ0067FCZZ	19- 17	AC		C	
LBŌSZ1031FCZZ	17- 15	AC		C	
LBŌSZ1508FCZZ	4- 19	AG		C	
〃	7- 14	AG		C	
〃	24- 15	AG		C	
LBŌSZ1509FCZ1	24- 28	AD		C	
LBŌSZ1510FCZZ	24- 18	AF		C	
LBŌSZ1851FCZZ	17- 13	AC		C	
LBRC-0055FCZZ	24- 10	AK		C	
LBSHZ0005QSZZ	18- 36	AC		C	
LBSHZ0006QSZZ	4- 22	AC		C	
〃	7- 52	AC		C	
LBSHZ0303FCZZ	4- 20	AC		C	
〃	7- 18	AC		C	
〃	24- 9	AC		C	
LFiX-0004QSZZ	26- 15	AC		C	
LFiX-0284FCZZ	14- 11	AC		C	
LFRM-0003QSZ1	10- 9	AP		D	
LFRM-0003QSZ2	10- 9	AP		D	
LFRM-0004QSZZ	19- 7	AV		D	
LFRM-0005QSZZ	19- 30	AQ		D	
LFRM-0006QSZZ	23- 13	AN		C	
LFRM-0007QSZ2	23- 25	AK		C	
LFRM-0010QSZZ	24- 35	AN		D	
LFRM-0011QSZ1	4- 35	AL		D	
LFRM-0012QSZZ	8- 26	AD		D	
LFRM-0013QSZZ	8- 10	AG		D	
LFRM-0014QSZZ	5- 30	AE		C	
LFRM-0015QSZZ	5- 17	AK		C	
LFRM-0033QSZZ	7- 28	AP		D	
LFRM-0035QSZZ	16- 21	AZ		D	
LHLDR0081QSZZ	28- 24	AC		C	
LHLDW1226FCZZ	27- 3	AB		C	
〃	31- 12	AB		C	
LHLDW1334FCZZ	16- 43	AA		C	
LHLDW2133SCZZ	12- 36	AC		C	
LHLDZ0009QSDZ	25- 1	AG		C	
LHLDZ0010QSZ1	26- 14	AL		C	
LHLDZ0011QSZZ	12- 4	AD		C	
LHLDZ0013QSZZ	14- 5	AD		C	
LHLDZ0016QSZZ	29- 5	AM		C	

PARTS CODE	NO.	PRICE RANK	NEW MARK	PART RANK	
LHLDZ0017QSZZ	17- 30	AD		C	
LHLDZ0018QSZZ	16- 13	AE		C	
LHLDZ0019QSZZ	14- 2	AN		C	
LHLDZ0050QSZZ	18- 1	AP		C	
LHLDZ0080QSZZ	17- 58	AC		C	
LPiNS0008QSZZ	16- 26	AD		C	
LPiNS0009QSZZ	16- 26	AD		C	
LPLTM0003YSZZ	28- 33	AK		C	
LPLTM0016QSZZ	17- 42	AE		C	
LPLTM0017QSZ3	18- 1	AQ		C	
LPLTM0020QSZZ	18- 21	AL		C	
LPLTM0022QSZ2	19- 29	AF		C	
LPLTM0033QSZZ	29- 8	AF		C	
LPLTM0034QSZ1	29- 9	AE	N	C	
LPLTM0043QSZZ	10- 5	AD		C	
LPLTM0046QSZZ	17- 25	AE		C	
LPLTM0088QSZZ	18- 37	AN		C	
LPLTM0089QSZZ	18- 38	AH		C	
LPLTM0096QSZZ	3- 53	AF		C	
〃	6- 30	AF		C	
LPLTM0097QSZZ	12- 17	AE		C	
LPLTM0098QSZZ	12- 18	AE		C	
LPLTM0122QSZZ	3- 52	AD		C	
LPLTM0132QSZZ	10- 5	AH		C	
LPLTM0133QSZ1	16- 31	AE		C	
LPLTM0146QSZZ	8- 1	AD		C	
LPLTM0149QSZZ	16- 41	AD		C	
LPLTM0194QSZZ	28- 19	AC		C	
LPLTM2642FCGZ	27- 4	AD		C	
LPLTM5106FCZZ	27- 1	AR		C	
LPLTM5111FCZZ	11- 4	AC		C	
LPLTM5422FCZZ	17- 59	AC		C	
LPLTP0009QSZZ	19- 38	AS		C	
LPLTP0010QSZZ	29- 24	AD		C	
LPLTP0011QSZZ	3- 2	AH		C	
LPLTP0012QSZZ	3- 3	AH		C	
LPLTP0013QSZZ	5- 3	AD		C	
〃	8- 43	AD		C	
LPLTP0014QSZZ	3- 28	AK		C	
LPLTP0015QSZZ	5- 39	AH		C	
LPLTP0041QSZZ	3- 39	AE		C	
LPLTP0139QSZZ	6- 44	AF		C	
LPLTP0140QSZZ	6- 42	AF		C	
LPLTP0150QSZZ	7- 26	AG		C	
LPLTP5107FCZZ	27- 5	AH		C	
LPLTP5108FCZZ	27- 13	AH		C	
LRALM0002QSZZ	11- 15	AF		C	
LRALM0003QSZZ	11- 14	AG		C	
LRALP0001QSZZ	17- 34	AM		C	
LSŌU-0001QSZZ	1- 2	AW		D	
LSŌU-0002QSZZ	24- 48	AL		D	
LSŌU-0003QSZZ	24- 49	AK		D	
LSŌU-0004QSZZ	3- 1	AX		D	
LSŌU-0005QSZ3	6- 34	BB		D	
LSŌU-0006QSZZ	3- 9	AL		D	
LSŌU-0007QSZZ	3- 54	BC		D	
LSŌU-0008QSZZ	1- 4	AH		D	
LSŌU-0020QSZZ	6- 43	AT		D	
LSTPP0007QSZZ	4- 5	AC		C	
LSTPP0008QSZZ	7- 20	AD		C	
LSTPP0116FCZZ	19- 18	AA		C	
LSTPP0161FCZZ	27- 18	AB		C	
LSTPP0300FCZZ	24- 37	AB		C	
LX-BZ0001QSZZ	31- 16	AD		C	
LX-BZ0004QSZZ	11- 16	AB		C	
〃	12- 6	AB		C	
LX-BZ0010QSZZ	19- 8	AB		C	
LX-BZ0011QSZZ	19- 42	AB		C	
LX-BZ0012QSZZ	8- 13	AC		C	
LX-BZ0016QSZZ	3- 33	AC		C	
〃	6- 31	AC		C	
LX-BZ0020QSZZ	16- 42	AB		C	
LX-BZ0049FCZZ	11- 29	AB		C	
LX-BZ0324FCZZ	11- 27	AA		C	
LX-BZ0335FCZZ	14- 8	AA		C	
LX-BZ0656FCZZ	28- 22	AD		C	
LX-BZ0700FCZZ	17- 54	AA		C	
LX-BZ0735FCZZ	19- 36	AA		C	
LX-BZ3006SC0S	16- 28	AA		C	
LX-WZ0023FCZZ	17- 43	AA		C	
LX-WZ0119FCZZ	11- 32	AA		C	

PARTS CODE	NO.	PRICE RANK	NEW MARK	PART RANK	
LX-WZ0313FCZZ	19- 26	AA		C	
LX-WZ0329FCZZ	29- 13	AB		C	
LX-WZ2028SCZZ	17- 51	AA		C	
〃	27- 10	AA		C	
【M】					
MARMP0001QSZZ	8- 11	AF		C	
MARMP0002QSZZ	4- 13	AD		C	
〃	7- 25	AD		C	
MARMP0003QSZ1	4- 4	AD		C	
〃	7- 19	AD		C	
MARMP0004QSZZ	4- 34	AF		C	
〃	7- 42	AF		C	
MARMP0173FCZZ	24- 4	AC		C	
MARMP0204FCZ1	24- 39	AF		C	
MARMP0205FCZZ	24- 38	AF		C	
MHNG-0002QSZZ	24- 40	AC		C	
MHNG-0003QSZZ	6- 32	AX		C	
MHNG-0004QSZZ	6- 28	AX		C	
MHNG-0005QSZZ	3- 30	AY		C	
MHNG-0006QSZZ	3- 45	AY		C	
MLEVF0041QSZZ	3- 25	AD		C	
MLEVP0005QSZZ	15- 5	AD		C	
MLEVP0006QSZZ	17- 2	AD		C	
MLEVP0007QSZZ	23- 17	AD		C	
MLEVP0009QSZZ	4- 9	AD		C	
〃	7- 22	AD		C	
MLEVP0010QSZZ	4- 10	AE		C	
〃	7- 23	AE		C	
MLEVP0011QSZ1	7- 27	AE		C	
MLEVP0014QSZZ	19- 28	AF		C	
MLEVP0015QSZZ	19- 23	AF		C	
MLEVP0036QSZZ	3- 18	AD		C	
MLEVP0048QSZZ	17- 49	AD		C	
MSPRC0016QSZZ	25- 7	AC		C	
MSPRC0017QSZZ	25- 5	AC		C	
MSPRC0018QSZZ	25- 6	AC		C	
MSPRC0021QSZZ	15- 7	AB		C	
MSPRC0022QSZ1	15- 9	AC		C	
MSPRC0023QSZZ	20- 15	AB		C	
MSPRC0024QSZZ	16- 8	AA		C	
MSPRC0026QSZZ	17- 3	AB		C	
MSPRC0027QSZZ	26- 10	AC		C	
MSPRC0028QSZZ	26- 11	AC		C	
MSPRC0030QSZZ	10- 14	AC		C	
MSPRC0031QSZZ	10- 13	AB		C	
MSPRC0032QSZZ	10- 11	AB		C	
MSPRC0036QSZZ	23- 26	AB		C	
MSPRC0037QSZZ	17- 62	AB		C	
MSPRC0038QSZ1	23- 16	AC		C	
MSPRC0039QSZ1	23- 14	AC		C	
MSPRC0040QSZZ	11- 19	AB		C	
MSPRC0045QSZZ	29- 30	AA		C	
MSPRC0047QSZZ	17- 31	AA		C	
MSPRC0048QSZZ	24- 41	AB		C	
MSPRC0049QSZZ	24- 14	AC		C	
MSPRC0050QSZZ	10- 25	AB		C	
MSPRC0051QSZZ	26- 12	AA		C	
MSPRC0053QSZZ	20- 3	AB		C	
MSPRC0055QSZZ	19- 25	AC		C	
MSPRC0062QSZZ	5- 4	AC		C	
〃	8- 45	AC		C	
MSPRC0063QSZZ	5- 36	AB		C	
〃	8- 28	AB		C	
MSPRC0077QSZZ	17- 41	AB		C	
MSPRC0080QSZZ	23- 18	AB		C	
MSPRC0108QSZZ	27- 15	AC		C	
MSPRC0109QSZZ	24- 50	AC		C	
MSPRC0115QSZZ	4- 33	AB		C	
〃	7- 44	AB		C	
MSPRC0149QSZZ	3- 51	AC		C	
〃	6- 27	AC		C	
MSPRC0161QSZZ	17- 16	AF		C	
MSPRC1145FCZZ	27- 17	AA		C	
MSPRC1315FCZ1	24- 16	AD		C	
MSPRC1316FCZ1	4- 18	AE		C	
〃	7- 15	AE		C	
〃	17- 11	AE		C	
〃	24- 27	AE		C	
MSPRC1318FCZ1	20- 23	AA		C	
〃	24- 30	AA		C	
MSPRC1873FCZ1	27- 16	AB		C	

PARTS CODE	NO.	PRICE RANK	NEW MARK	PART RANK	
MSPRC2175FCZZ	24- 33	AA		C	
MSPRD0069QSZZ	3- 42	AC		C	
MSPRD0070QSZZ	3- 41	AC		C	
MSPRD0076QSZ1	10- 6	AD		C	
MSPRD0108QSZZ	23- 31	AC		C	
MSPRD0114QSZ1	4- 36	AD		C	
MSPRD0126QSZZ	3- 19	AC		C	
MSPRD0154QSZZ	3- 48	AD		C	
MSPRD0158QSZZ	17- 50	AB		C	
MSPRD0163QSZZ	5- 45	AC		C	
MSPRK0001YSZZ	28- 23	AB		C	
MSPRP0015QSZZ	9- 7	AC		C	
MSPRP0033QSZZ	19- 6	AD		C	
MSPRP0034QSZZ	19- 14	AE		C	
MSPRP0052QSZZ	3- 47	AD		C	
MSPRP0059QSZZ	3- 7	AD		C	
〃	6- 37	AD		C	
MSPRP0060QSZZ	3- 50	AD		C	
〃	6- 26	AD		C	
MSPRP0065QSZZ	5- 31	AD		C	
〃	8- 41	AD		C	
MSPRP0079QSZZ	23- 29	AD		C	
MSPRP0110QSZ1	21- 6	AD		C	
〃	22- 6	AD		C	
MSPRP0113QSZ1	6- 15	AD		C	
MSPRT0019QSZZ	13- 5	AB		C	
MSPRT0020QSZZ	15- 2	AB		C	
MSPRT0029QSZZ	10- 3	AC		C	
MSPRT0054QSZZ	19- 37	AC		C	
MSPRT0061QSZZ	6- 24	AC		C	
MSPRT0064QSZ1	8- 15	AC		C	
MSPRT0066QSZ1	4- 25	AC		C	
〃	7- 30	AC		C	
MSPRT0067QSZ1	4- 14	AB		C	
〃	7- 24	AB		C	
MSPRT0513FCZ1	26- 7	AA		C	
【N】					
NBLT-0005QSZZ	16- 5	AH		B	
NBLTT0001QSZZ	16- 20	AH		B	
NBLTT0002QSZZ	11- 26	AH		B	
NBLTT0003QSZZ	8- 37	AG		B	
NBLTT0004QSZZ	16- 37	AH		B	
NBLTT0006QSZZ	8- 18	AG		B	
NBLTT0010QSZZ	5- 34	AG		B	
NBLTT0011QSZZ	5- 22	AG		B	
NBRGC0017QSZZ	5- 27	AC		C	
〃	8- 23	AC		C	
NBRGC0020QSZZ	28- 16	AH		C	
NBRGC0021QSZZ	28- 13	AD		C	
NBRGC0100FCZ1	17- 8	AC		C	
NBRGC0133FCZ1	11- 31	AC		C	
NBRGC0387FCZ1	11- 23	AC		C	
NBRGC0579FCZZ	16- 2	AE		C	
NBRGM0501FCZZ	5- 25	AB		C	
〃	8- 25	AB		C	
NBRGM5006BCZZ	3- 26	AB		C	
NBRGP0260FCZ1	19- 24	AD		C	
NBRGP0299FCZZ	29- 14	AC		C	
NBRGP0562FCZZ	17- 19	AD		C	
〃	23- 11	AD		C	
NBRGP0567FCZZ	19- 20	AG		C	
NCPL-0003QSZZ	29- 12	AC		C	
NCPL-0006QSZZ	16- 7	AC		C	
NFANP0001QSZ1	16- 12	AX		B	
NFANP0005QSZZ	16- 12	AW		B	
NGERH0001YSZZ	28- 12	AD		C	
NGERH0007QSZZ	20- 11	AH		C	
NGERH0008QSZ1	20- 16	AL		C	
NGERH0009QSZZ	20- 7	AD		C	
NGERH0010QSZZ	20- 6	AD		C	
NGERH0012QSZZ	20- 18	AE		C	
NGERH0013QSZZ	20- 19	AG		C	
NGERH0014QSZZ	20- 8	AD		C	
NGERH0015QSZZ	20- 10	AD		C	
NGERH0016QSZZ	20- 12	AD		C	
NGERH0017QSZZ	20- 17	AD		C	
NGERH0018QSZZ	20- 14	AC		C	
NGERH0019QSZZ	20- 13	AD		C	
NGERH0020QSZZ	17- 9	AG		C	
NGERH0021QSZZ	23- 27	AD		C	
〃	24- 46	AD		C	

PARTS CODE	NO.	PRICE RANK	NEW MARK	PART RANK	
NGERH0022QSZZ	17- 21	AC		C	
NGERH0025QSZZ	17- 23	AD		C	
NGERH0026QSZZ	17- 22	AD		C	
NGERH0027QSZZ	11- 18	AH		C	
NGERH0036QSZZ	29- 28	AC		C	
NGERH0037QSZZ	29- 27	AC		C	
NGERH0038QSZZ	29- 26	AC		C	
NGERH0039QSZZ	29- 25	AE		C	
NGERH0047QSZZ	5- 23	AF		C	
〃	8- 21	AF		C	
NGERH0048QSZZ	10- 22	AE		C	
NGERH0050QSZZ	20- 4	AD		C	
NGERH0051QSZZ	10- 23	AE		C	
NGERH0073QSZZ	4- 16	AE		C	
〃	7- 17	AE		C	
NGERH0079QSZZ	5- 26	AD		C	
NGERH0135QSZZ	28- 9	AD		C	
NGERH0145QSZZ	28- 15	AD		C	
NGERH0193FCZZ	3- 6	AB		C	
〃	6- 36	AB		C	
〃	27- 11	AB		C	
NGERH0540FCZ3	19- 19	AD		C	
NGERH0972FCZZ	8- 12	AB		C	
〃	23- 6	AB		C	
〃	24- 19	AB		C	
NGERH0990FCZZ	4- 28	AB		C	
〃	7- 51	AB		C	
〃	23- 9	AB		C	
〃	24- 7	AB		C	
NGERH0991FCZZ	24- 20	AC		C	
NGERH0992FCZZ	4- 30	AB		C	
〃	7- 45	AB		C	
〃	24- 3	AB		C	
NGERH1132FCZZ	17- 18	AH		C	
NGERH1169FCZZ	17- 47	AF		C	
NGERR0377FCZZ	3- 4	AD		C	
〃	6- 41	AD		C	
NPLYZ0001QSZZ	16- 4	AE		C	
NPLYZ0002QSZZ	20- 5	AC		C	
NPLYZ0003QSZZ	11- 28	AM		C	
NPLYZ0004QSZZ	11- 25	AG		C	
NPLYZ0005QSZZ	11- 9	AG		C	
NPLYZ0006QSZZ	11- 10	AD		C	
NPLYZ0007QSZZ	14- 4	AG		C	
NPLYZ0010QSZZ	4- 23	AE		C	
〃	7- 32	AE		C	
NPLYZ0146FCZZ	5- 33	AB		C	
〃	8- 38	AB		C	
NRŌLi0014QSZ2	19- 21	AZ		C	
NRŌLM0022QSZZ	5- 43	AP		C	
〃	8- 30	AP		C	
NRŌLM0023QSZZ	8- 29	AP		C	
NRŌLM0026QSZZ	5- 40	AQ		C	
NRŌLM0027QSZZ	5- 6	AP		C	
NRŌLM0074QSZZ	28- 31	AZ		C	
NRŌLP0007QSZ1	16- 1	AQ		C	
NRŌLP0010QSZZ	3- 46	AD		C	
〃	6- 23	AD		C	
NRŌLP0011QSZZ	3- 36	AD		C	
〃	6- 18	AD		C	
NRŌLP0012QSZ1	16- 3	AS		C	
NRŌLP0024QSZZ	4- 27	AL		C	
〃	7- 49	AL		C	
NRŌLP0025QSZZ	10- 24	AM		C	
NRŌLP0046QSZZ	15- 1	AC		C	
NRŌLP0073QSZZ	28- 5	AS		C	
NRŌLP1008FCZZ	24- 5	AK		C	
NRŌLP1122FCZZ	10- 17	AF		C	
〃	10- 26	AF		C	
〃	15- 8	AF		C	
〃	23- 24	AF		C	
NRŌLR0013QSZZ	17- 7	AQ		C	
NRŌLR0016QSZZ	23- 12	AT		C	
NRŌLR0028QSZZ	19- 27	AZ		C	
NRŌLR0922FCZZ	4- 31	AR		C	
〃	7- 46	AR		C	
〃	24- 1	AR		C	
NSFTZ0003QSZZ	29- 33	AD		C	
NSFTZ0004QSZZ	29- 15	AK		C	
NSFTZ0006QSZ1	10- 15	AG		C	
NSFTZ0006QSZZ	10- 15	AG		C	

PARTS CODE	NO.	PRICE RANK	NEW MARK	PART RANK	
NSFTZ0007QSZZ	23- 23	AG		C	
NSFTZ0008QSZZ	11- 30	AQ		C	
NSFTZ0009QSZZ	3- 49	AE		C	
〃	6- 21	AE		C	
NSFTZ0010QSZZ	6- 20	AE		C	
NSFTZ0011QSZZ	4- 32	AG		C	
〃	7- 48	AG		C	
NSFTZ0012QSZZ	4- 21	AG		C	
〃	7- 12	AG		C	
NSFTZ0013QSZZ	3- 38	AF		C	
NSFTZ0014QSZZ	3- 43	AP		C	
NSFTZ2311FCZZ	24- 8	AU		C	
【P】					
PBŌX-0012QSZZ	28- 17	AN		D	
PBRSR0002QSZ1	12- 13	AH		B	
PBRSR0003QSZ1	5- 7	AK		B	
〃	8- 33	AK		B	
PBRSR0004QSZZ	19- 4	AE		B	
PBRSR0022QSZ1	28- 35	AF	N	C	
PCAPH0008QSZZ	29- 34	AC		C	
PCASZ0002QSZZ	26- 16	AL		D	
PCASZ0003QSZZ	12- 2	AK		C	
PCASZ0004QSZZ	29- 4	AK		C	
PCLC-0002QSZZ	5- 28	AV		B	
PCŌVP0007QSZZ	17- 38	AF		D	
PCŌVP0008QSZZ	17- 60	AE		C	
PCŌVP0009QSZZ	17- 61	AE		C	
PCŌVP0010QSZZ	19- 5	AG		D	
PCŌVP0011QSZZ	19- 15	AK		D	
PCŌVP0012QSZ1	21- 3	AK		C	
PCŌVP0013QSZZ	17- 32	AD		D	
PCŌVP0018QSZZ	29- 23	AG		C	
PCŌVP0019QSZZ	24- 44	AK		D	
PCŌVP0022QSZZ	3- 10	AR		C	
PCŌVP0023QSZ1	22- 3	AK		D	
PCŌVP0035QSZZ	1- 6	AL		C	
PCŌVP0036QSZZ	3- 8	AK		D	
〃	6- 35	AK		D	
PCŌVP0042QSZZ	8- 8	AH		D	
PCŌVP0043QSZZ	8- 7	AL		D	
PCŌVP0044QSZ1	18- 5	AP		D	
PCŌVP0045QSZ1	18- 9	AK		D	
PCŌVP0046QSZ3	18- 7	AE		D	
PCŌVP0046QSZ4	18- 7	AE		D	
PCŌVP0047QSZZ	1- 28	AH		D	
PCŌVP0048QSZZ	1- 30	AF		D	
PCŌVP0051QSZZ	17- 53	AF		D	
PCŌVP0081QSZZ	28- 3	AF		D	
PCŌVP0082QSZZ	28- 20	AD		D	
PCUSS0009QSZZ	14- 10	AA		C	
PCUSS0010QSZ1	3- 56	AV		D	
〃	6- 33	AV		D	
PCUSS0011QSZZ	12- 40	AB		C	
PCUSS0016QSZZ	3- 31	AB		C	
PCUSS0201FCZZ	14- 14	AA		C	
PFiLW0009QSZ2	7- 1	AL		D	
PFiLW0009QSZ3	7- 1	AL		D	
PFiLW0009QSZ5	7- 1	AL		D	
PFiLW0009QSZZ	7- 1	AL		D	
PFiLZ0002QSZZ	1- 23	AL		D	
PFiLZ0006QSZ7	9- 1	AS		D	
PFiLZ0007QS15	9- 1	AS		D	
PFiLZ0007QS16	9- 1	AS		D	
PFiLZ0007QS17	9- 1	AS		D	
PFiLZ0007QS19	9- 1	AS		D	
PFiLZ0007QS20	9- 1	AS		D	
PFiLZ0007QS21	9- 1	AS	N	D	
PFTA-0003QSZZ	18- 8	AF		D	
PFTA-0006QSZZ	1- 26	AG		D	
PGiDH0025QSZ1	26- 4	AG		C	
PGiDH0026QSZZ	19- 34	AE		C	
PGiDH0027QSZZ	5- 41	AK		C	
PGiDH0028QSZZ	5- 8	AK		C	
PGiDH0029QSZZ	8- 32	AL		C	
PGiDM0006QSZ2	15- 6	AM		C	
PGiDM0007QSZZ	12- 15	AP		C	
PGiDM0008QSZZ	10- 4	AD		C	
PGiDM0009QSZZ	16- 25	AG		C	
PGiDM0010QSZ1	17- 5	AG		C	
PGiDM0011QSZZ	26- 2	AE		C	
PGiDM0012QSZZ	23- 22	AF		C	

PARTS CODE	NO.	PRICE RANK	NEW MARK	PART RANK	
PGiDM0013QSZZ	23- 21	AF		C	
PGiDM0014QSZZ	23- 20	AF		C	
〃	24- 12	AF		C	
PGiDM0017QSZZ	24- 43	AE		C	
PGiDM0018QSZZ	24- 42	AE		C	
PGiDM0019QSZZ	12- 37	AH		C	
PGiDM0020QSZZ	12- 38	AH		C	
PGiDM0021QSZZ	5- 38	AQ		C	
PGiDM0022QSZZ	5- 5	AN		C	
PGiDM0023QSZZ	19- 1	AP		C	
PGiDM0024QSZ2	8- 27	AQ		C	
PGiDM0057QSZZ	5- 10	AL		C	
PGiDM0058QSZZ	8- 3	AK		C	
PGiDM0059QSZZ	12- 37	AG		C	
PGiDM0060QSZZ	12- 38	AG		C	
PGiDM0090QSZZ	28- 7	AH		C	
PGLSP0001QSZZ	1- 16	AX		B	
PGLSP0002QSZZ	1- 37	AU		B	
PGSK-0001QSZZ	12- 10	AG		C	
PGSK-0006QSZZ	12- 12	AE		C	
PGSK-1004DCZZ	12- 23	AF		C	
PGUMS0004QSZZ	12- 39	AA		C	
PMiR-0002QSZZ	14- 12	AN		B	
PMLT-0008QSZZ	28- 32	AC		C	
PMLT-0015QSZZ	29- 17	AA		C	
PMLT-0016QSZZ	29- 18	AD		C	
PMLT-0017QSZZ	29- 20	AC		C	
PMLT-0018QSZ1	29- 21	AC		C	
PMLT-0024QSZZ	1- 22	AC		C	
PMLT-0026QSZZ	16- 39	AC		C	
PMLT-0028QSZZ	18- 34	AC		C	
PMLT-0037QSZZ	18- 34	AD		C	
PPiPP0003QSZZ	17- 17	AD		C	
PPiPP0004QSZZ	29- 31	AH		C	
PPiPP0008QSZZ	7- 16	AD		C	
PPiPP0010QSZZ	4- 17	AD		C	
PPiPP0109FCZ1	17- 10	AC		C	
〃	24- 17	AC		C	
PPiPP0175FCZZ	24- 26	AC		C	
PRNGP0090FCZZ	3- 27	AA		C	
PSEL-0021QSZ1	29- 19	AF		C	
PSEL-0022QSZ1	29- 16	AF		C	
PSEL-0080QSZZ	28- 28	AE		C	
PSEL-0082QSZZ	28- 18	AC		C	
PSEL-0083QSZ1	28- 6	AF		C	
PSEL-0084QSZ1	28- 8	AA		C	
PSEL-0096QSZZ	28- 30	AA	N	C	
PSEL-0110QSZZ	28- 2	AF	N	C	
PSHEP0019QSZ1	26- 3	AC		C	
PSHEP0020QSZZ	26- 13	AB		C	
PSHEP0021QSZZ	26- 6	AA		C	
PSHEP0023QSZZ	19- 35	AF		C	
PSHEP0037QSZ1	6- 16	AE		C	
PSHEP0038QSZZ	3- 21	AE		C	
〃	6- 12	AE		C	
PSHEP0042QSZZ	12- 11	AC		C	
PSHEP0047QSZZ	19- 40	AC		C	
PSHEP0061QSZZ	27- 8	AA		C	
PSHEP0063QSZZ	6- 13	AC		C	
PSHEP3029FCZZ	5- 21	AA		C	
〃	8- 20	AA		C	
PSHEZ0018QSZZ	26- 1	AF		C	
PSHEZ0026QSZZ	1- 14	AE		C	
PSHEZ0027QSZZ	1- 15	AC		C	
PSHEZ0029QS11	28- 29	AC		C	
PSHEZ0034QSZ1	2- 3	AV		D	
PSHEZ0039QSZZ	5- 2	AG		C	
〃	8- 44	AG		C	
PSHEZ0045QSZ1	19- 33	AC		C	
PSHEZ0048QSZZ	14- 1	AE		C	
PSHEZ0066QSZZ	12- 20	AE		C	
PSHEZ0068QSZZ	3- 29	AC		C	
PSHEZ0072QSZZ	12- 33	AE		C	
PSHEZ0074QSZZ	12- 24	AE		C	
PSHEZ0075QSZZ	22- 7	AC		C	
PSHEZ0079QSZZ	1- 25	AD		C	
PSHEZ0080QSZZ	15- 11	AE		C	
PSHEZ0081QSZ1	12- 28	AD		C	
PSHEZ0082QSZZ	12- 29	AB		C	
PSHEZ0093QSZZ	1- 31	AC		C	
PSHEZ0094QSZZ	1- 32	AC		C	

PARTS CODE	NO.	PRICE RANK	NEW MARK	PART RANK	
PSHEZ0095QSZZ	1- 33	AD		C	
PSHEZ0102QSZZ	6- 14	AD		C	
PSHEZ0111QSZZ	12- 30	AC		C	
PSHEZ0112QSZZ	6- 22	AE		C	
PSHEZ0115QSZ1	17- 55	AC		C	
PSHEZ0118QSZZ	3- 44	AE		C	
PSHEZ0119QSZZ	3- 32	AE		C	
PSHEZ0141QSZZ	1- 35	AC		C	
〃	30- 6	AC		C	
PSHEZ0151QSZZ	3- 23	AD		C	
PSHEZ0155QSZZ	16- 38	AD		C	
PSHEZ0156QSZZ	16- 36	AE		C	
PSHEZ0162QSZZ	5- 44	AB		C	
〃	20- 30	AB		C	
PSHEZ0163QSZ1	18- 25	AC		C	
PSHEZ0164QSZZ	5- 42	AF		C	
〃	8- 31	AF		C	
PSHEZ0181QSZZ	1- 38	AC		C	
PSHEZ0188QSZ1	7- 53	AL		D	
PSHEZ0188QSZ2	7- 53	AL		D	
PSHEZ0188QSZ3	7- 53	AL		D	
PSHEZ0188QSZ4	7- 53	AL		D	
PSHEZ0190QSZZ	32- 1	AD		C	
PSHEZ0195QSZZ	18- 35	AD		C	
PSHEZ2026FCZ1	17- 29	AB		C	
PSHEZ2174FCZZ	5- 1	AB		C	
〃	8- 42	AB		C	
〃	17- 36	AB		C	
PSHEZ4142FCZZ	27- 2	AC		C	
PSHT-0004QSZ1	29- 29	AC		C	
PSPAF0013QSZZ	33- 1	AD		C	
PSPAZ0017QSZZ	16- 32	AK		C	
PSPAZ0696FCZZ	29- 32	AC		C	
PSPŌ-0001QSZZ	3- 37	AB		C	
〃	6- 19	AB		C	
PSPŌ-0002QSZZ	4- 2	AC		C	
PSPŌ-0003QSZZ	3- 34	AC		C	
PSPŌ-0004QSZZ	3- 20	AB		C	
〃	5- 14	AB		C	
PSPŌ-0006QSZ1	7- 11	AB		C	
PTME-0002QSZZ	20- 24	AD		C	
PTME-0003QSZ1	20- 26	AD		C	
PTME-0004QSZZ	10- 2	AG		C	
PTME-0019QSZZ	4- 26	AD		C	
〃	7- 29	AD		C	
PTME-0178FCZ1	24- 32	AC		C	
PTME-0179FCZZ	24- 31	AC		C	
PTME-0255FCZZ	27- 6	AG		C	
PTME-0256FCZZ	27- 14	AG		C	
PTPE-0003QSZ1	29- 7	AF		C	
PTPE-0010QSZZ	1- 34	AC		C	
PTUBP0005QSZZ	15- 13	AC		C	
PTUBP0119FCZZ	8- 50	AB		C	
PWiR-0001QSZZ	19- 3	AF		C	
PWiR-0003QSZZ	11- 1	AR		C	
【Q】					
QACCB7521QCZZ	31- 3	AS		B	
QACCB7620QCN1	31- 3	AX		B	
QACCB7622QCN1	31- 3	AZ		B	
QACCD7618QCZZ	31- 3	AQ		B	
QACCE7621QCZZ	31- 3	*	N	B	
QACCE7640QCZZ	31- 3	*	N	B	
QACCF7620QCZZ	31- 3	AX		B	
QACCJ9610QCZZ	31- 3	AR		B	
QACCL7621QCZZ	31- 3	AX		B	
QACCR7621QCZZ	31- 3	AZ		B	
QACCV6621QCN1	31- 3	AU		B	
QCNCM0011QSZZ	35- 1	AH		C	
QCNCM0038QSZZ	39- 33	AH		C	
〃	40- 1	AH		C	
QCNCM0811FCZZ	33- 2	AC		C	
QCNCM0861FCZZ	34- 1	AB		C	
QCNCM0879FCZZ	39- 36	AF		C	
QCNCM0923FC10	39- 4	AE		C	
〃	40- 2	AE		C	
QCNCM0923FC14	39- 13	AE		C	
QCNCM0923FC18	39- 14	AF		C	
〃	40- 3	AF		C	
QCNCM0923FC24	39- 15	AF		C	
〃	40- 4	AF		C	
QCNCM1005MCZZ	39- 16	AB		C	

PARTS CODE	NO.	PRICE RANK	NEW MARK	PART RANK	
QCNCM1005MCZZ	40- 5	AB		C	
QCNCM1069AC0D	39- 17	AC		C	
〃	40- 6	AC		C	
QCNCM1119LC0C	39- 18	AC		C	
QCNCM1119LC0E	39- 19	AC		C	
〃	40- 7	AC		C	
QCNCM2401SC0C	39- 20	AB		C	
〃	40- 8	AB		C	
QCNCM2401SC0E	39- 21	AC		C	
〃	40- 9	AC		C	
QCNCM2401SC0F	39- 22	AB		C	
〃	40- 10	AB		C	
QCNCM7014SC0C	39- 23	AA		C	
〃	40- 11	AA		C	
QCNCM7014SC0D	39- 24	AB		C	
〃	40- 12	AB		C	
QCNCM7014SC0E	39- 25	AB		C	
〃	40- 13	AB		C	
QCNCM7022SC1J	32- 2	AE		C	
QCNCP0340QCZZ	39- 26	AC		C	
〃	40- 14	AC		C	
QCNCW0015QSZZ	39- 34	AE		C	
〃	40- 15	AE		C	
QCNCW0024QSZZ	39- 32	AF		C	
〃	40- 16	AF		C	
QCNCW0033QSZZ	39- 35	AV		C	
QCNCW0034QSZZ	32- 3	AL		C	
QCNCW0948FCZ5	39- 27	AC		C	
QCNCW1124LC0D	39- 28	AB		C	
〃	40- 17	AB		C	
QCNCW1124LC0H	39- 29	AC		C	
〃	40- 18	AC		C	
QCNCW1124LC1H	39- 30	AD		C	
〃	40- 19	AD		C	
QCNCW1124LC2F	40- 20	AD		C	
QCNCW1124LC3A	39- 31	AE		C	
QCNCW1132LC1H	34- 2	AD		C	
QCNW-0003TSZZ	31- 25	*	N	C	
QCNW-7252HSZZ	31- 25	*	N	C	
QCNW-7253HSZZ	31- 25	*	N	C	
QCNW-7254HSZZ	31- 25	*	N	C	
QJAKT0002QSZZ	32- 4	AG	N	C	
QSLP-0005QSZZ	16- 16	AE		C	
QSLP-0006QSZZ	16- 14	AE		C	
QSLP-0007QSZZ	26- 9	AC		C	
QSŌCZ0002GCZZ	40- 21	AD		C	
QSŌCZ0002QSZZ	39- 37	AD		C	
QSŌCZ0003QSZZ	39- 38	AD		C	
QSŌCZ0051FCZZ	32- 5	AD		C	
QSŌCZ6408ACZZ	40- 22	AB		C	
QSW-B0003QSZZ	17- 26	AF		B	
〃	17- 57	AF		B	
QSW-P0005QSZZ	33- 3	AC		B	
〃	34- 3	AC		B	
QSW-S0012QSZZ	32- 6	AP	N	B	
QTANP0004QSZZ	29- 3	AD		C	
QTANP0005QSZZ	29- 6	AC		C	
【R】					
RC-DZ1080RC0L	32- 7	AR		C	
RCiLZ0003QSZZ	39-132	AC		C	
〃	40- 23	AC		C	
RCiLZ0004QSZZ	39-131	AE		C	
〃	40- 24	AE		C	
RCiLZ0007QSZZ	32- 8	AF		C	
RCiLZ1032CCZZ	32- 9	AD		C	
〃	39-123	AD		C	
RCiLZ1063YCZZ	32- 10	AC		C	
RCiLZ7009XCZZ	32- 11	AC		C	
RCiLZ7020XCZZ	32- 12	AE		C	
RC-KZ1053RC1E	32- 13	AC		C	
RCŌRF0002QSZZ	12- 22	AE		C	
〃	15- 12	AE		C	
RCŌRF0003QSZZ	18- 33	AL		C	
RCRMZ0002QSZZ	33- 4	AE		B	
RCRSP6676RCZZ	32- 14	AG		B	
RCRSZ0001QSZZ	39- 10	AG		B	
〃	40- 25	AG		B	
RCRSZ0003QSZZ	39- 12	AP		B	
〃	40- 26	AP		B	
RCRSZ0011QSZZ	39- 11	AP		B	
〃	40- 27	AP		B	

PARTS CODE	NO.	PRICE RANK	NEW MARK	PART RANK	
RCRSZ0013QSZZ	32- 15	AP		B	
RDTCM0013QSZZ	28- 26	AY		B	
RDTCT0004QSZZ	5- 37	AL		B	
〃	8- 46	AL		B	
RDTCT0128FCZZ	19- 9	AR		B	
RFiLZ0002QSZZ	32- 16	AG		C	
RFiLZ0004QSZZ	39-133	AM		C	
〃	40- 28	AM		C	
RFiLZ0005QSZZ	32- 17	AC		C	
RH-DZ0016FCZZ	39-124	AB		B	
〃	40- 29	AB		B	
RLMPU0010QSZZ	19- 22	BA		B	
RLMPU0011QSZZ	19- 22	BA		B	
RMŌTD0009QSZZ	16- 9	AU		B	
RMŌTP0010QSZZ	20- 2	BN		B	
RMŌTP0011QSZZ	11- 20	BA		B	
RMŌTP0012QSZZ	16- 35	AW		B	
RMŌTP0013QSZZ	5- 13	BB		B	
〃	8- 9	BB		B	
RMPTW4100QCJJ	39- 58	AA		B	
〃	40- 30	AA		B	
RMPTW4102QCJJ	39- 55	AB		B	
〃	40- 31	AB		B	
RMPTW4103QCJJ	32- 18	AB		B	
RMPTW4203QCJJ	39- 56	AA		B	
〃	40- 32	AA		B	
RMPTW4220QCJJ	32- 19	AB		B	
RMPTW4223QCJJ	32- 20	AB		B	
RMPTW4300QCJJ	39- 59	AA		B	
〃	40- 33	AA		B	
RMPTW4390QCJJ	32- 21	AA		B	
RMPTW4470QCJJ	39- 57	AB		B	
〃	40- 34	AB		B	
RPLU-0001QSZZ	20- 22	AN		B	
RPLU-0002QSZZ	20- 25	AN		B	
RPLU-0003QSZZ	24- 29	AN		B	
RPLU-0004QSZ1	4- 11	AQ		B	
RPLU-0005QSZZ	3- 17	AQ		B	
RPLU-0015QSZZ	5- 15	AS		B	
RPLU-0016QSZZ	20- 22	AN		B	
RPLU-0017QSZZ	7- 21	AQ		B	
RRLYD342CQCZZ	39-135	AM		B	
RRLYZ3411SCZZ	32- 22	AR		B	
RTRNZ7014XCZZ	32- 23	AR		B	
RVR-B1440QCZZ	33- 5	AF		B	
【S】					
SPAKA0047QSZZ	31- 9	AX		D	
SPAKA0048QSZZ	31- 2	AP		D	
SPAKA0049QSZZ	31- 1	AP		D	
SPAKA0050QSZZ	31- 11	AE		D	
SPAKA0051QSZZ	31- 14	AC		D	
SPAKA0063QSZZ	31- 1	AQ		D	
SPAKA0064QSZ1	31- 14	AC		D	
SPAKA0068QSZZ	31- 18	AD		D	
SPAKA0106QSZZ	31- 9	AY		D	
SPAKA0163QSZZ	31- 14	AC		D	
SPAKA0186QSZZ	31- 2	AR		D	
SPAKA0188QSZZ	31- 19	AF		D	
SPAKA0189QSZZ	31- 20	AF		D	
SPAKA0191QSZZ	31- 2	AN		D	
SPAKA0192QSZZ	31- 1	AR		D	
SPAKA0208QSZZ	31- 1	AN		D	
SPAKA0209QSZZ	31- 2	AQ		D	
SPAKA5116FCZZ	31- 21	AB		D	
SPAKC0052QS78	31- 10	AY	N	D	
SPAKC0052TS75	31- 10	*	N	D	
SPAKC0052TS76	31- 10	*	N	D	
SPAKC0195TS12	31- 10	*	N	D	
SPAKC0210QS14	31- 10	AY		D	
SPAKC0211TS12	31- 10	*	N	D	
SPAKC0212QS16	31- 10	AZ		D	
SPAKC0213TS12	31- 10	*	N	D	
SSAKA2347QCZZ	31- 8	AB		D	
SSAKA2440QCZZ	31- 8	AB		D	
SSAKA3001CCZZ	31- 5	AA		D	
SSAKA5003CCZZ	31- 5	AA		D	
SSAKZ0002QSZZ	31- 6	AF		D	
【T】					
TCADZ0049QSZZ	31-102	AH		D	
TCADZ2001QCZA	31-102	AE		D	
TCAUA0770FCZZ	1- 19	AB		D	

PARTS CODE	NO.	PRICE RANK	NEW MARK	PART RANK	
TCAUH0007QSZZ	21- 7	AD		C	
〃	22- 8	AD		C	
TCAUH0991FCZZ	19- 32	AE		D	
TCAUH0992FCZ1	19- 32	AF		D	
TCAUS0009QSZZ	31- 26	AF		D	
TiNSD0517TSZZ	31- 7	*	N	D	
TiNSE0459QSZZ	31- 7	AP		D	
TiNSE0462QSZZ	31- 7	AP		D	
TiNSE0478TSZZ	31- 7	*	N	D	
TiNSE0520QSZZ	31- 7	BB	N	D	
TiNSE0526QSZZ	31- 7	BD	N	D	
TiNSE0529QSZZ	31- 7	BE	N	D	
TiNSF0513TSZZ	31- 7	*	N	D	
TiNSG0512TSZZ	31- 7	*	N	D	
TiNSH0516TSZZ	31- 7	*	N	D	
TiNSi0515TSZZ	31- 7	*	N	D	
TiNSS0525TSZZ	31- 7	*	N	D	
TiNSZ0476TSZZ	31- 7	*	N	D	
TiNSZ0601TSZZ	31- 7	*	N	D	
TLABH0152QSZZ	31-101	AD		D	
TLABH0153QSZZ	31-101	AD		D	
TLABH0154QSZZ	31-101	AD		D	
TLABH0282QSZZ	1- 11	AF		C	
TLABZ0058QSZZ	1- 8	AD		C	
TLABZ0105QSZZ	1- 41	AD		C	
TLABZ0106QSZZ	31-103	AF		C	
TLABZ3405FCZZ	32- 24	AB		D	
〃	39- 6	AB		D	
〃	40- 35	AB		D	
TLABZ3568FCZZ	27- 12	AB		D	
TLABZ4047FCZZ	1- 40	AC		C	
TTAG-0002QSZZ	31- 13	AB		D	
TTAG-0003QSZZ	31- 15	AC		D	
【U】					
UBATL2034SCZZ	32- 25	AH		B	
UBNDA0001FCZZ	31- 4	AA		C	
UCLEZ0006QS11	28- 4	AF		D	
UCLEZ0007QSZZ	29- 10	AU		C	
【V】					
VCCCCY1EH102J	32- 26	AB		C	
VCCCCY1HH101J	32- 27	AA		C	
〃	39- 98	AA		C	
〃	40- 36	AA		C	
VCCCCY1HH120J	39- 99	AA		C	
〃	40- 37	AA		C	
VCCCCY1HH180J	32- 28	AA		C	
〃	39-100	AA		C	
〃	40- 38	AA		C	
VCCCCY1HH201J	32- 29	AA		C	
VCCCCY1HH220J	32- 30	AA		C	
VCCCCY1HH330J	39-101	AA		C	
〃	40- 39	AA		C	
VCCCCY1HH470J	39-102	AA		C	
〃	40- 40	AA		C	
VCCCTQ1HH330J	32- 33	AC	N	C	
VCCCTQ1HH332J	32- 31	AC		C	
VCCCTV1HH201J	34- 4	AA		C	
VCCCTV1HH330J	32- 32	AA		C	
VCCCTV1HH471J	33- 6	AA		C	
VCE9GA1EW106M	32- 34	AC	N	C	
VCE9GA1JW336M	32- 35	AD	N	C	
VCE9GA1VW475M	32- 36	AC	N	C	
VCEAEA1CW107M	32- 37	AC		C	
VCEAEA1HW335M	32- 38	AA		C	
VCEAGA0JW107M	32- 39	AC		C	
VCEAGA1AW226M	32- 40	AB		C	
VCEAGA1CW106M	32- 41	AA		C	
〃	39-109	AA		C	
〃	40- 41	AA		C	
VCEAGA1CW107M	39-110	AC		C	
〃	40- 42	AC		C	
VCEAGA1CW226M	32- 42	AB		C	
〃	39-111	AB		C	
〃	40- 43	AB		C	
VCEAGA1CW476M	32- 43	AB		C	
〃	39-112	AB		C	
〃	40- 44	AB		C	
VCEAGA1EW106M	39-113	AA		C	
〃	40- 45	AA		C	
VCEAGA1EW476M	39-114	AA		C	
〃	40- 46	AA		C	

PARTS CODE	NO.	PRICE RANK	NEW MARK	PART RANK	
VCEAGA1HW474M	39-115	AB		C	
〃	40- 47	AB		C	
VCEAGA1VW106M	39-116	AA		C	
〃	40- 48	AA		C	
VCEAGA1VW226M	39-117	AC		C	
〃	40- 49	AC		C	
VCEAGA1VW476M	39-118	AB		C	
〃	40- 50	AB		C	
VCEAJU1CW226M	33- 7	AB		C	
VCEAJU1CW476M	34- 5	AB		C	
VCFYJU2EA224K	32- 44	AD		C	
VCFYJU2EA334K	32- 45	AD		C	
VCFYJU2EA474K	32- 46	AD		C	
VCFYJU2EA824K	32- 47	AE		C	
VCKYCY1CB333K	32- 48	AB		C	
VCKYCY1CF104Z	39-103	AA		C	
〃	40- 51	AA		C	
VCKYCY1EB223K	39-106	AA		C	
〃	40- 52	AA		C	
VCKYCY1EF104Z	32- 49	AA		C	
〃	32- 50	AA		C	
VCKYCY1HB102K	39-104	AA		C	
〃	40- 53	AA		C	
VCKYCY1HB103K	32- 51	AA		C	
VCKYCY1HB222K	39-105	AA		C	
〃	40- 54	AA		C	
VCKYCY1HB331K	32- 52	AA		C	
VCKYCY1HB391K	32- 53	AB		C	
VCKYCY1HB471K	39-107	AB		C	
〃	40- 55	AB		C	
VCKYCY1HF473Z	32- 54	AA		C	
VCKYPU1HB102K	36- 3	AA		C	
〃	37- 3	AA		C	
〃	38- 3	AA		C	
VCKYTQ1HF104Z	35- 2	AA		C	
VCKYTV1EB104K	33- 8	AA		C	
〃	34- 6	AA		C	
VCKYTV1HB102K	34- 7	AA		C	
VCKYTV1HB223K	34- 8	AA		C	
〃	35- 3	AA		C	
VCKYTW1HB104K	39-108	AC		C	
〃	40- 56	AC		C	
VCQYNA1HM102K	32- 55	AA		C	
VCQYNA1HM104K	40- 57	AB		C	
VCQYNA1HM333K	32- 56	AA		C	
VCQYNA1HM822K	32- 57	AA		C	
〃	32- 58	AA		C	
VCQYNU1HM332J	32- 59	AC		C	
VCQYNU1HM683J	32- 60	AC		C	
VHD10E1////-1	32- 61	AA		B	
VHD1N4005E/-1	39-129	AB		B	
〃	40- 58	AB		B	
VHD1SS355//-1	32- 62	AB		B	
VHDDA204K//-1	39-127	AC		B	
〃	40- 59	AC		B	
VHDDAN202U/-1	32- 63	AB		B	
〃	33- 9	AB		B	
〃	39-125	AB		B	
〃	40- 60	AB		B	
VHDDAP202U/-1	32- 64	AB		B	
〃	33- 10	AB		B	
〃	39-126	AB		B	
〃	40- 61	AB		B	
VHDDSS133//-1	32- 65	AA		B	
〃	34- 9	AA		B	
〃	39-128	AA		B	
〃	40- 62	AA		B	
VHDEK14////-1	32- 66	AE		B	
VHDRB501V40-1	32- 67	AD		B	
VHDS1NB60//-1	32- 68	AD		B	
VHEHZ3B1///-1	32- 69	AB		B	
VHEMTZJ22B/-1	39-130	AA		B	
VHERD27EB//-1	32- 70	AB		B	
VHERD4.3EL3-1	32- 71	AB		B	
VHERD5.1EB2-1	32- 72	AA		B	
VHi16163CLT-6	35- 4	BA		B	
VHi1816-6//-1	32- 74	AZ		B	
VHi27C08014QS	32- 73	BD		B	
VHi61256J12-1	39- 39	AS		B	
VHi74VHC08/-1	39- 40	AE		B	
〃	40- 63	AE		B	

PARTS CODE	NO.	PRICE RANK	NEW MARK	PART RANK	
VHi74VHC11///	32- 75	AF		B	
VHiBU4051BCF/	32- 76	AF		B	
VHiBU4053BCF1	32- 77	AE		B	
VHiCG46533175	32- 78	BA		B	
VHiCGS410//-1	32- 79	AU		B	
VHiH8S/2350FP	39- 8	AY		B	
〃	40- 64	AY		B	
VHiHD4074344/	33- 11	AX		B	
VHiHG73C025FD	39- 9	BE		B	
〃	40- 65	BE		B	
VHiHY18164CSJ	32- 80	AZ		B	
VHiLC7935//-1	34- 10	AN		B	
VHiLC8213K/-1	32- 81	AZ		B	
VHiLM311//-1F	32- 82	AD		B	
VHiLM358PS/-S	39- 41	AC		B	
〃	40- 66	AC		B	
VHiLM386M//-1	32- 83	AE		B	
VHiLZ9FH19///	32- 84	AV		B	
VHiM24C02WBN6	39- 42	AG		B	
〃	40- 67	AG		B	
VHiM51953BL-1	39- 43	AF		B	
〃	40- 68	AF		B	
VHiM66236FP-1	39- 44	AT		B	
〃	40- 69	AT		B	
VHiMC34063P-1	32- 85	AN		B	
VHiMX27C2048D	40- 70	AY		B	
VHiMX27C4096D	39- 7	AZ		B	
VHiNJM084M/-F	32- 86	AH		B	
VHiNJM2903M/-	39- 45	AD		B	
〃	40- 71	AD		B	
VHiNJM3414AM1	39- 46	AF		B	
〃	40- 72	AF		B	
VHiNJM431U/-1	33- 12	AF		B	
VHiNJM4558MF1	32- 87	AE		B	
VHiNJU6355E-1	32- 88	AM		B	
VHiNS32FX164/	32- 89	BG		B	
VHiNSFX200-25	32- 90	BG		B	
VHiSLA7027MU/	39- 1	AQ		B	
〃	40- 73	AQ		B	
VHiSN74LS07NS	39- 48	AF		B	
〃	40- 74	AF		B	
VHiTA7291S/-1	39- 49	AF		B	
〃	40- 75	AF		B	
VHiTC74HC14FN	39- 50	AH		B	
〃	40- 76	AH		B	
VHiTC74HC151F	34- 11	AG		B	
〃	39- 51	AG		B	
〃	40- 77	AG		B	
VHiTD62003AP1	39- 53	AG		B	
〃	40- 78	AG		B	
VHiTD62064AF/	39- 54	AM		B	
VHiTD62503F/-	39- 52	AG		B	
〃	40- 79	AG		B	
VHiTHS56F//-1	32- 91	AS		B	
VHiTL431CLP-2	32- 92	AG		B	
VHiULN2003ANS	32- 93	AE		B	
VHiW166G/////	32- 94	AT		B	
VHiW24257A12J	32- 95	AN		B	
〃	40- 80	AN		B	
VHiW2465S70LL	32- 96	AW		B	
VHP1LHEE-002A	34- 13	AC		B	
VHP1LHLE-002A	33- 13	AC		B	
〃	34- 12	AC		B	
VHPCST338G-25	34- 14	AP		B	
VHPGP1S53V/-1	36- 4	AE		B	
〃	37- 4	AE		B	
〃	38- 4	AE		B	
VHPPC817///-1	32- 97	AF		B	
VHPTLP627//-1	32- 98	AH		B	
VHViCPN38//-1	39-134	AF		B	
〃	40- 81	AF		B	
VHVRA501PV6-1	32- 99	AE		B	
VHVTNR5V101K/	32-100	AD	N	B	
VRD-HT2EY181J	32-101	AA		C	
VRD-HT2EY303J	32-103	AA		C	
VRD-HT2EY392J	32-104	AA		C	
VRD-HT2EY4R7J	32-105	AA		C	
VRD-HT2EY561J	32-106	AA		C	
VRD-HT2HY101J	32-107	AA		C	
VRD-HT2HY110J	32-108	AA		C	
VRD-HT2HY391J	32-109	AA		C	

PARTS CODE	NO.	PRICE RANK	NEW MARK	PART RANK	
VRD-HT2HY561J	32-110	AA		C	
VRH-ST2HB157K	19- 2	AD		C	
VRNHT2EK1301F	39- 5	AB		C	
〃	40- 82	AB		C	
VRNHT2EK2401F	40- 82	AA		C	
VRS-CY1JD000J	32-111	AA		C	
VRS-CY1JD100J	32-112	AA		C	
〃	39- 70	AA		C	
〃	40- 84	AA		C	
VRS-CY1JD101J	32-113	AA		C	
〃	39- 71	AA		C	
〃	40- 85	AA		C	
VRS-CY1JD102F	39- 72	AA		C	
〃	40- 86	AA		C	
VRS-CY1JD102J	32-114	AA		C	
〃	39- 73	AA		C	
〃	40- 87	AA		C	
VRS-CY1JD103F	39- 74	AB		C	
〃	40- 88	AB		C	
VRS-CY1JD103J	32-115	AA		C	
〃	32-116	AA		C	
〃	39- 75	AA		C	
〃	40- 89	AA		C	
VRS-CY1JD104J	32-117	AA		C	
VRS-CY1JD105F	39- 76	AA		C	
〃	40- 90	AA		C	
VRS-CY1JD105J	32-118	AA		C	
VRS-CY1JD106J	32-119	AA		C	
VRS-CY1JD121J	32-120	AA		C	
VRS-CY1JD122J	39- 77	AA		C	
〃	40- 91	AA		C	
VRS-CY1JD123J	32-121	AA		C	
VRS-CY1JD152J	39- 78	AA		C	
〃	40- 92	AA		C	
VRSCY1JD1542F	32-122	AA		C	
VRS-CY1JD181J	32-123	AA		C	
VRS-CY1JD182J	32-124	AA		C	
VRS-CY1JD202J	39- 81	AA		C	
〃	40- 93	AA		C	
VRS-CY1JD203J	39- 79	AA		C	
〃	40- 94	AA		C	
VRS-CY1JD205J	39- 80	AA		C	
〃	40- 95	AA		C	
VRSCY1JD2153F	32-126	AA		C	
VRS-CY1JD221J	32-127	AA		C	
VRS-CY1JD222J	32-128	AA		C	
〃	39- 82	AA		C	
VRS-CY1JD223J	32-102	AA		C	
〃	32-129	AA		C	
VRS-CY1JD242J	39- 83	AA		C	
〃	40- 96	AA		C	
VRSCY1JD2433F	32-130	AA		C	
VRS-CY1JD301J	39- 84	AA		C	
〃	40- 97	AA		C	
VRS-CY1JD330J	32-131	AA		C	
VRS-CY1JD331J	32-132	AA		C	
〃	39- 85	AA		C	
〃	40- 98	AA		C	
VRS-CY1JD332J	39- 86	AA		C	
〃	40- 99	AA		C	
VRS-CY1JD333J	32-133	AA		C	
〃	39- 87	AA		C	
〃	40-100	AA		C	
VRSCY1JD3740F	32-134	AA		C	
VRS-CY1JD390J	32-135	AA		C	
VRSCY1JD3921F	32-136	AA		C	
VRSCY1JD4642F	32-137	AA		C	
VRS-CY1JD470J	39- 88	AA		C	
〃	40-101	AA		C	
VRS-CY1JD472J	32-138	AA		C	
〃	39- 89	AA		C	
〃	40-102	AA		C	
VRS-CY1JD473J	32-139	AA		C	
〃	39- 90	AA		C	
〃	40-103	AA		C	
VRSCY1JD4872F	32-140	AA		C	
VRSCY1JD5112F	32-141	AA		C	
VRS-CY1JD511J	32-142	AA		C	
VRS-CY1JD512J	32-143	AA		C	
〃	39- 91	AA		C	
〃	40-104	AA		C	

PARTS CODE	NO.	PRICE RANK	NEW MARK	PART RANK	
VRSCY1JD5622F	32-144	AA		C	
VRS-CY1JD562J	32-145	AA		C	
VRS-CY1JD621F	39- 92	AA		C	
〃	40-105	AA		C	
VRS-CY1JD621J	39- 93	AA		C	
〃	40-106	AA		C	
VRS-CY1JD622J	32-146	AA		C	
VRS-CY1JD680J	39- 94	AA		C	
〃	40-107	AA		C	
VRS-CY1JD750J	32-147	AA		C	
VRS-CY1JD751J	39- 95	AA		C	
〃	40-108	AA		C	
VRS-CY1JD752J	39- 96	AA		C	
〃	40-109	AA		C	
VRS-CY1JD821J	32-148	AA		C	
VRS-CY1JD822J	32-149	AA		C	
VRS-CY1JD911J	32-150	AA		C	
VRS-CY1JD912J	39- 97	AA		C	
〃	40-110	AA		C	
VRS-HT2HA4R7J	32-151	AC		C	
VRS-HT3DA102J	39- 66	AA		C	
〃	40-111	AA		C	
VRS-HT3DA1R0J	39- 67	AB		C	
〃	40-112	AB		C	
VRS-HT3DAR22J	39- 68	AA		C	
〃	40-113	AA		C	
VRS-RE3AA333J	32-152	AK		C	
VRS-RE3DA101J	32-153	AB		C	
VRS-TP2BD000J	33- 14	AA		C	
〃	34- 15	AA		C	
VRS-TP2BD121J	39- 60	AA		C	
〃	40-114	AA		C	
VRS-TP2BD151J	39- 61	AA		C	
〃	40-115	AA		C	
VRS-TP2BD221J	39- 62	AB		C	
〃	40-116	AB		C	
VRS-TP2BD241J	39- 63	AA		C	
〃	40-117	AA		C	
VRS-TP2BD432J	39- 64	AA		C	
〃	40-118	AA		C	
VRS-TP2BD472J	39- 65	AA		C	
〃	40-119	AA		C	
VRS-TS2AD000J	32-154	AA		C	
VRS-TS2AD100J	35- 5	AA		C	
VRS-TS2AD101J	33- 15	AA		C	
〃	34- 16	AA		C	
VRS-TS2AD102J	33- 16	AA		C	
〃	34- 17	AA		C	
VRS-TS2AD103J	33- 17	AA		C	
〃	34- 18	AA		C	
VRS-TS2AD105J	33- 18	AA		C	
VRS-TS2AD121J	34- 19	AA		C	
VRS-TS2AD151J	34- 20	AA		C	
VRS-TS2AD152J	34- 21	AA		C	
VRS-TS2AD202J	33- 19	AA		C	
VRS-TS2AD203J	33- 20	AA		C	
VRS-TS2AD242F	33- 21	AB		C	
VRS-TS2AD272F	33- 22	AA		C	
VRS-TS2AD332J	32-155	AA		C	
VRS-TS2AD391J	33- 23	AA		C	
VRS-TS2AD472J	34- 22	AA		C	
VRS-TS2AD473J	32-156	AA		C	
VRS-TS2AD511J	34- 23	AA		C	
VRS-TS2AD680J	32-157	AA		C	
VRS-TX2HD511J	33- 24	AB		C	
VS2SA1036KQRC	39-119	AB		B	
〃	40-120	AB		B	
VS2SC1627Y+-1	32-159	AD		B	
VS2SC3382-/-1	32-158	AD		B	
VS2SC3708-/-1	32-159	AD		B	
VS2SD1853-/-1	39-122	AC		B	
VSBUK554/200A	32-160	AN		B	
VSDTA143EK/-1	33- 25	AB		B	
VSDTA143XK/-1	39-120	AB		B	
〃	40-121	AB		B	
VSDTB113ZK/-1	34- 24	AD		B	
VSDTC114EK/-1	32-161	AB		B	
VSDTC114EKA-1	39-121	AC		B	
〃	40-122	AC		B	
VSP50PB518P//	8- 5	AL		B	
VVLHLM3212-01	33- 26	BA		E	

PARTS CODE	NO.	PRICE RANK	NEW MARK	PART RANK	
【X】					
XBBSD30P04000	5- 18	AA		C	
〃	20- 21	AA		C	
XBBSD30P08000	12- 8	AA		C	
〃	16- 29	AA		C	
〃	24- 34	AA		C	
XBBSD40P06000	20- 1	AA		C	
XBBSE30P08000	1- 9	AA		C	
〃	1- 29	AA		C	
〃	12- 41	AA		C	
〃	18- 39	AA		C	
〃	28- 1	AA		C	
XBPSC30P06ES0	25- 4	AA		C	
XBPSC30P06K00	16- 17	AA		C	
XBPSD30P05K00	5- 19	AA		C	
〃	8- 17	AA		C	
〃	11- 5	AA		C	
XBPSD30P06000	20- 29	AA		C	
XBPSD30P06KS0	3- 16	AA		C	
〃	4- 12	AA		C	
〃	7- 31	AA		C	
〃	24- 24	AA		C	
〃	28- 14	AA		C	
XBPSD30P08000	32-162	AA		C	
XBPSD30P08KS0	3- 24	AA		C	
〃	17- 37	AA		C	
XBPSD30P10KS0	3- 40	AB		C	
〃	19- 10	AB		C	
XBPSD40P06KS0	14- 3	AA		C	
XEBSD26P05000	29- 2	AA		C	
XEBSD26P06000	7- 10	AA		C	
XEBSD30P06000	16- 15	AA		C	
〃	24- 13	AA		C	
〃	26- 5	AA		C	
〃	28- 21	AA		C	
XEBSD30P06KS0	23- 15	AA		C	
XEBSD30P08000	1- 27	AA		C	
〃	3- 55	AA		C	
〃	4- 6	AA		C	
〃	5- 9	AA		C	
〃	6- 25	AA		C	
〃	7- 41	AA		C	
〃	8- 2	AA		C	
〃	8- 16	AA		C	
〃	8- 24	AA		C	
〃	16- 44	AA		C	
〃	17- 52	AA		C	
〃	25- 8	AA		C	
XEBSD30P10000	6- 2	AA		C	
〃	10- 10	AA		C	
〃	16- 10	AA		C	
〃	16- 33	AA		C	
〃	29- 1	AA		C	
XEBSD30P12000	5- 32	AA		C	
〃	6- 9	AA		C	
〃	8- 4	AA		C	
〃	13- 1	AA		C	
XEBSD30P30000	16- 11	AA		C	
XEBSD40P06000	14- 6	AA		C	
XEBSD40P10000	6- 3	AA		C	
XEBSE30P06000	9- 11	AA		C	
〃	10- 8	AA		C	
〃	23- 30	AA		C	
XEBSE30P08000	1- 3	AA		C	
〃	9- 9	AA		C	
〃	19- 41	AA		C	
〃	21- 2	AA		C	
〃	22- 2	AA		C	
〃	23- 8	AA		C	
〃	24- 11	AA		C	
〃	27- 9	AA		C	
XEBSE30P10000	17- 4	AA		C	
〃	17- 44	AA		C	
〃	18- 14	AA		C	
XEBSE30P12000	17- 40	AA		C	
〃	19- 31	AA		C	
XEBSE30P14000	3- 22	AA		C	
XEBSE40P12000	1- 5	AA		C	
〃	3- 13	AA		C	
〃	12- 21	AA		C	
〃	16- 30	AA		C	

PARTS CODE	NO.	PRICE RANK	NEW MARK	PART RANK	
XEBSE40P12000	17- 35	AA		C	
〃	17- 45	AA		C	
〃	18- 15	AA		C	
〃	23- 32	AA		C	
〃	24- 36	AA		C	
XEBSE40P14000	3- 14	AA		C	
〃	6- 29	AA		C	
XEBSF30P08000	28- 11	AA		C	
XEPSD20P18000	21- 5	AB		C	
〃	22- 5	AB		C	
XEPSD30P06X00	23- 28	AA		C	
XEPSD30P08X00	3- 5	AA		C	
〃	6- 38	AA		C	
〃	8- 6	AA		C	
〃	10- 21	AA		C	
XESSD30P10000	18- 11	AA		C	
XHBSE30P06000	5- 12	AA		C	
〃	10- 7	AA		C	
〃	11- 13	AA		C	
〃	16- 34	AA		C	
〃	18- 3	AA		C	
〃	23- 4	AA		C	
〃	24- 23	AA		C	
XHBSE30P08000	12- 1	AA		C	
XHBSE30P10000	3- 15	AA		C	
XNESD30−24000	32-163	AA		C	
XPSSJ20−07000	17- 12	AA		C	
〃	23- 10	AA		C	
〃	24- 6	AA		C	
XPSSJ30−12000	11- 24	AB		C	
XPSSP20−07000	4- 29	AA		C	
〃	7- 47	AA		C	
XPSSP20−09000	5- 24	AA		C	
〃	8- 22	AA		C	
XRESP20−04000	3- 35	AA		C	
XRESP30−04000	19- 39	AA		C	
XRESP30−06000	4- 24	AA		C	
〃	7- 50	AA		C	
〃	10- 16	AA		C	
XRESP40−05000	11- 11	AA		C	
XRESP40−06000	4- 15	AA		C	
〃	5- 29	AA		C	
〃	7- 13	AA		C	
〃	17- 14	AA		C	
〃	23- 7	AA		C	
〃	24- 2	AA		C	
〃	27- 7	AA		C	
〃	28- 10	AA		C	
XRESP50−06000	5- 20	AA		C	
〃	8- 19	AA		C	
〃	11- 22	AA		C	
〃	17- 6	AA		C	
〃	28- 25	AA		C	
XRESP70−08000	11- 17	AA		C	
〃	17- 48	AA		C	
XUBUZ30P06000	28- 27	AA		C	
XUBUZ30P08000	28- 34	AA		C	
XWHSD30−05080	32-164	AA		C	

PARTS CODE	NO.	PRICE RANK	NEW MARK	PART RANK	

CAUTION FOR BATTERY REPLACEMENT

(Danish) ADVARSEL !
Lithiumbatteri - Eksplosionsfare ved fejlagtig hndtering.
Udskiftning m* kun ske med batteri
af samme fabrikat og type.
Levr det brugte batteri tilbage til leverandoren.

(English) Caution !
Danger of explosion if battery is incorrectly replaced.
Replace only with the same or equivalent type
recommended by the manufacturer.

"BATTERY DISPOSAL"
CONTAINS MANGANESE DIOXIDE LITHIUM BATTERY. MUST BE DISPOSED OF PROPERLY
REMOVE THE BATTERY FROM THE PRODUCT AND CONTACT FEDERAL OR STATE
ENVIRONMENTAL AGENCIES FOR INFORMATION ON RECYCLING AND DISPOSAL OPTIONS

(Finnish) VAROITUS
Paristo voi rjht,jos se on virheellisesti asennettu.
Vaihda paristo ainoastaan laitevalmistajan suosittelemaan
tyyppiin. Hvit kytetty paristo valmistajan ohjeiden
mukaisesti.

(French) ATTENTION
Il y a danger d'explosion s'il y a remplacement incorrect
de la batterie. Remplacer uniquement avec une batterie du
mme type on d'un type quivalent recommand* par
le constructeur.
Mettre au rbut les batteries usages conformment aux
instructions du fabricant.

(Swedish) VARNING
Explosionsfara vid felaktigt batteribyte.
Anvnd samma batterityp eller en ekvivalent
typ som rekornmenderas av apparattillverkaren.
Kassera anvnt batteri enligt fabrikantens
Instruktion.

SHARP

COPYRIGHT © 2001 BY SHARP CORPORATION

All rights reserved.

Printed in Japan.

No part of this publication may be reproduced,
stored in a retrieval system, or transmitted,
in any form or by any means,
electronic, mechanical, photocopying, recording, or otherwise,
without prior written permission of the publisher.

SHARP CORPORATION
Digital Document Systems Group
Quality & Reliability Control Center
Yamatokoriyama, Nara 639-1186, Japan

2001 February Printed in Japan ⓣ